Substructure and ground bearing floors

CHAPTER **5.1**

This chapter gives guidance on meeting the Technical Requirements and recommendations for substructures (excluding foundations), including: substructure walls, ground bearing floors where infill is no deeper than 600mm, and installation of services below the damp proof course (DPC).

5.1.1	Compliance	01
5.1.2	Provision of information	01
5.1.3	Transfer of loads	01
5.1.4	Ground conditions	01
5.1.5	Services and drainage	02
5.1.6	Ground below fill	03
5.1.7	Fill below floors	03
5.1.8	Infill up to 600mm deep	04
5.1.9	Materials used for fill	04
5.1.10	Harmful or toxic materials	04
5.1.11	Regulatory solutions	05
5.1.12	Walls below DPC	05
5.1.13	Durability	06
5.1.14	Mortar	07
5.1.15	Wall tiles	07
5.1.16	Blinding	07
5.1.17	Ground floor slab and concrete	07
5.1.18	Laying the ground-bearing floor slab	08
5.1.19	Damp proof course	08
5.1.20	Damp proofing concrete floors	09
5.1.21	Thermal insulation	09
5.1.22	Installation of insulation	10
5.1.23	Further information	10

NHBC

Raising Standards. Protecting Homeowners

5.1.1 Compliance

Also see: Chapter 2.1

Substructures and ground-bearing floors shall comply with the Technical Requirements.

Substructures and ground-bearing floors that comply with the guidance in this chapter will generally be acceptable.

Ground-bearing floors may only be used where the depth of infill is less than 600mm deep and properly compacted.

5.1.2 Provision of information

Designs and specifications shall be produced in a clearly understandable format, include all relevant information and be distributed to appropriate personnel.

Design and specification information should be issued to site supervisors, relevant specialist subcontractors and suppliers, and include the following information:

- Plan dimensions and levels which should be related to benchmarks.
- The required sequence and depth of trench backfill where relevant to the design of the walls below the DPC.
- Details of trench backfill, infill and void formers.
- Work required to maintain the integrity of DPCs and damp proof membranes (DPMs).
- Information on proposed underground services, including points of entry to the building.
- Detailing of service penetrations through the substructure, including support of the structure above details of junctions between the DPM, DPC and tanking.
- Details of underfloor, floor edge and cavity insulation.

5.1.3 Transfer of loads

Also see: Chapters 4.1, 4.3, 5.2 and 6.1

Substructures and ground-bearing floors shall ensure that loads are supported and transferred to the foundations, or ground, without undue movement.

The design of the substructure should take account of findings from the site investigation. Where infill deeper than 600mm is needed, a suspended floor should be used.

Load-bearing partitions should have proper foundations and not be supported off ground-bearing floors. In Scotland, sleeper walls should not be built on ground-bearing floors.

5.1.4 Ground conditions

Also see: Chapters 4.1, 4.2, 5.2 and BRE Report 211

Substructure and ground-bearing floors shall not be adversely affected by ground conditions, and take account of:

a) ground hazards
b) bearing capacity of the ground
c) nature of the ground
d) effect of sloping ground on depth of infill and wall construction
e) site works and construction.

Ground hazards

Hazards likely to affect substructure and ground-bearing floors include contaminated materials, waterlogged ground and chemicals, particularly sulfates.

Where it is necessary to reduce the entry of radon gas, which should be identified in the site investigation, such precautions should be acceptable to NHBC.

Bearing capacity

Ground-bearing floors may not be suitable where the bearing capacity and nature of the ground varies, even where the depth of infill is less than 600mm. Special measures may be needed to restrict settlement, such as the use of suspended floor construction.

Nature of the ground

Where there is shrinkable soil, expansive materials or other unstable soils, suspended floor construction may be necessary.

Shrinkable soils are classified as those which contain more than 35% fine particles (silt and clay) and which have a Modified Plasticity Index of 10% or more. A soil testing laboratory should be consulted to verify the Plasticity Index of the soil.

The effect of sloping ground

Sloping ground may require steps in the substructure and possibly different floor levels.

Where more than 600mm of infill is required at any point in a self-contained area, the floor over the whole of that area must be of suspended construction.

Construction on steep slopes may involve walls below DPC level acting as retaining walls and should be designed by an engineer where (H) is greater than four times (T).

- (H) = height difference between floor/ground levels
- (T) = the total thickness of the retaining wall.

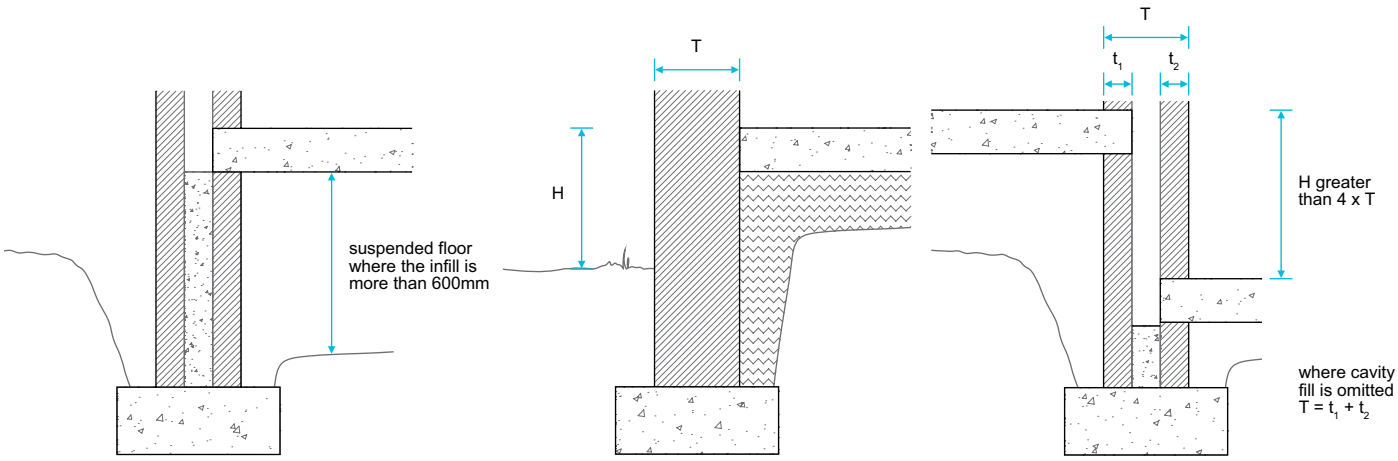

Site works and construction

Special precautions may be needed to prevent damage to the substructure from site operations on adjoining ground such as ground treatment, or surcharging due to infill.

5.1.5 Services and drainage

Also see: Chapters 5.3, 5.4, 6.2 and 8.1

Substructure and ground-bearing floors shall be installed to:

a) adequately protect existing services and ground water drainage

b) have suitable surface and subsoil drainage

c) make allowance for drainage and other services.

Adequately protect existing services and ground water drainage

All existing services should be located and identified before work commences. During dry periods it can be difficult to determine if ground water drains are active, so where they are severed or disturbed, they should be reconnected to a suitable outfall.

Existing active groundwater drainage should be retained to minimise the risk of flooding. Water from these drains may require diverting.

Where existing services conflict with the proposed foundations or substructure, and they are to remain, they should be protected or diverted and remaining voids filled with concrete or grout. Where they are no longer active and are not needed, they should be disconnected and grubbed up.

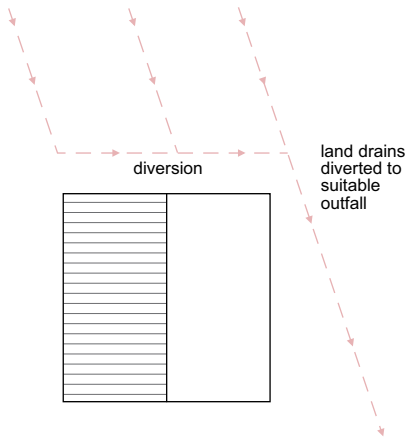

Surface water and subsoil drainage

Surface and/or subsoil drainage may be needed on sites where there is a risk of waterlogging.

Walls which act as retaining walls may require land drains, hardcore fill and suitable outlets to dispose of any subsoil water that collects behind the wall.

Ground or paths adjoining the home should:

- slope away at a slight fall
- generally be at least 150mm below the DPC.

Make allowance for drainage and other services

Design information should include all necessary details relating to the proposed underground services.

Drain pipes passing through or under the building may require flexible connections or other means of accommodating differential movement.

Where pipes penetrate walls, they should be provided with flexible joints or be sited in an opening formed by lintels.

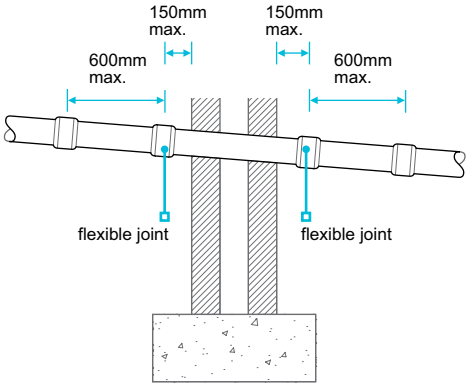

pipe bedded in walls

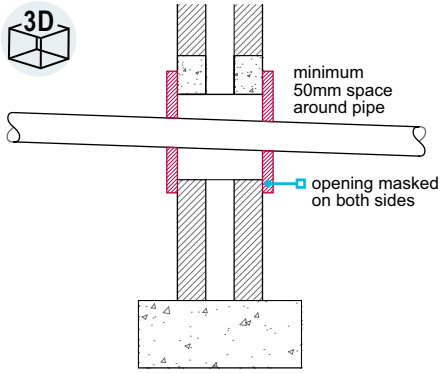

pipe passing through lintelled opening

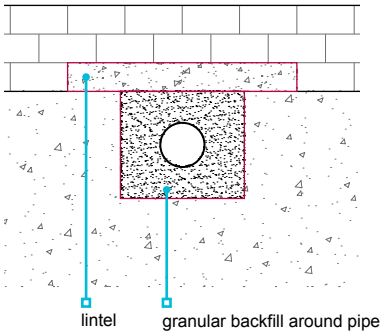

Services should be sleeved where they pass through a structural element. Where required, they should be arranged so that future access can be obtained without affecting structural stability.

When unidentified services, ducts, cables or pipes are exposed, advice should be sought from local offices of statutory undertakings and service supply companies.

5.1.6 Ground below fill

Ground below fill shall be adequately prepared to provide consistent support to the fill and the ground-bearing slab without undue movement.

Ground-bearing floor slabs may only be built on ground where:

- the ground is suitable to support floor loads and any other loads
- all topsoil containing vegetation and organic matter, including tree roots, has been removed
- there is a suitable and even bearing surface.

5.1.7 Fill below floors

Fill, including made ground, trench backfill and infill below ground-bearing floor slabs shall provide full and consistent support to ground-bearing slabs.

Where more than 600mm of infill is required at any point within a self-contained area, or the bearing capacity and nature of the ground varies, the floor over the self-contained area should be of suspended construction.

Infill under slabs and backfill in trenches should be properly placed and mechanically compacted to form a stable mass in layers not exceeding 225mm. Concrete may be used as an alternative to backfill in trenches.

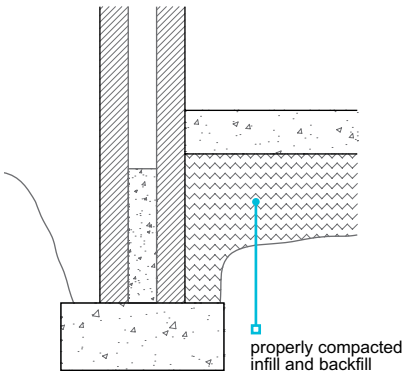

5.1.8 Infill up to 600mm deep

Also see: Chapter 5.2

Infill beneath ground-bearing floors shall be a maximum of 600mm deep.

Ground-bearing slabs are not acceptable where infill exceeds 600mm in depth.

Where the design requires in excess of 600mm of infill at any point within a self-contained area, the floor construction over the whole of that area is required to be independent of the fill and capable of supporting:

- self-weight
- non load-bearing partitions
- other imposed loads.

5.1.9 Materials used for fill

Also see: BRE DG 522 'Hardcore for supporting ground floors of buildings'

Materials used for fill shall be suitable for the intended use and, unless appropriate precautions are taken, free from hazardous materials. Issues to be taken into account include:

a) sources of fill materials

b) hazardous materials.

Fill should be:

- well graded
- inert and contain no hazardous materials
- able to pass a 150mm x 150mm screen in all directions.

Fill containing either expansive materials or chemicals is not acceptable for the support of ground-bearing slabs.

The following types of fill should not be used unless written permission has been obtained from NHBC:

- material obtained from demolition
- furnace ashes and other products of combustion
- colliery shale and any other residue from mineral extraction
- slags
- on wet sites, or sites with a high water table, crushed or broken bricks which have S1 designation according to BS EN 771.

Sources of fill material

Where the material is of a stable and uniform type, and from one source, it may only be necessary to check its suitability once. Where material is variable, or from a number of sources, it should all be suitable, and regular inspections and/or testing may be required.

Where industrial waste is permitted as fill material, it is essential that sufficient testing is carried out to ensure suitability.

Where material is obtained from stockpiles, check the material is uniform. Different forms of stockpiling can affect particle size/grading. The outside of a stockpile may be weathered and may not be the same as unweathered material.

Hazardous materials

The following fill materials require testing to ensure their suitability for use with ground-bearing slabs or as backfill to associated trenches:

- reactive materials
- organic materials
- toxic materials
- materials that include sulfates, e.g. gypsum
- materials that cause noxious fumes, rot, undue settlement or damage to surrounding materials
- acid wastes.

5.1.10 Harmful or toxic materials

Also see: BRE DG 522 'Hardcore for supporting ground floors of buildings'

Harmful or toxic materials present in the fill or in the ground shall be identified to the satisfaction of NHBC and not affect the performance of the substructure and ground-bearing slab.

Precautions should be taken by either:

- ensuring that made ground and fill materials are free from harmful or toxic substances, or
- designing the construction to contain, resist and prevent the adverse effects of such materials, using means acceptable to NHBC.

Tests for sulfate content should comply with the recommendations of BRE Special Digest 1 Third Edition by a suitably qualified person who has a detailed knowledge of the:

- material being tested
- proposed conditions of use.

The samples tested must be representative of the material, so it may be necessary to collect multiple samples to identify characteristics.

Where there are likely to be harmful levels of sulfate:

- the floor slab should be of an appropriate mix to resist sulfate attack or be protected by an impervious layer of 1200 gauge (0.3mm) polyethylene sheet, or 1000 gauge (0.25mm) where it complies with Technical Requirement R3. This may also serve as a DPM
- the concrete blocks in substructure walls should be sulfate resistant and suitable for the fill and ground conditions
- the mortar should be sulfate resisting to comply with of BS EN 1996-1-1.

Fill containing expansive materials or chemicals is not acceptable for use as infill or backfill.

5.1.11 Regulatory solutions

Use of recycled or secondary materials shall comply with the relevant waste regulatory requirements.

Table 1: Regulatory solution for fill, including recycled and secondary materials

Location	Materials used on:	Regulatory solution
England and Wales	Site of origin	CL:AIRE Code of Practice.
	Other sites and less than 5000t	Registration under a U1 exemption with the EA is required at the receiving site.
	Other sites and over 5000t	Ensure that the supplier has followed the WRAP protocol.
Northern Ireland and Scotland	Any site	Registration under a paragraph 19 exemption with the SEPA/NIEA is required at the receiving site.

EA: Environment Agency
CL:AIRE: Contaminated Land: Applications in Real Environments.
NIEA: Northern Ireland Environment Agency
SEPA: Scottish Environment Protection Agency

5.1.12 Walls below the DPC

Also see: Chapters 6.1 and 6.2

Substructure and walls below the DPC shall be suitably constructed. Issues to be taken into account include:

a) construction of walls acting as temporary retaining walls

b) concrete cavity fill.

Construction of walls acting as temporary retaining walls

Backfill should be placed in layers of equal thickness to both sides of the substructure walls, so that compaction on one side is not more than one layer ahead of the other. Where backfill is placed and compacted on one side of the foundation trench before the other side is backfilled, the wall will be acting as a temporary retaining wall.

In such cases, the wall should either be designed by an engineer in accordance with Technical Requirement R5 or the thickness (T) should be as indicated in Table 2.

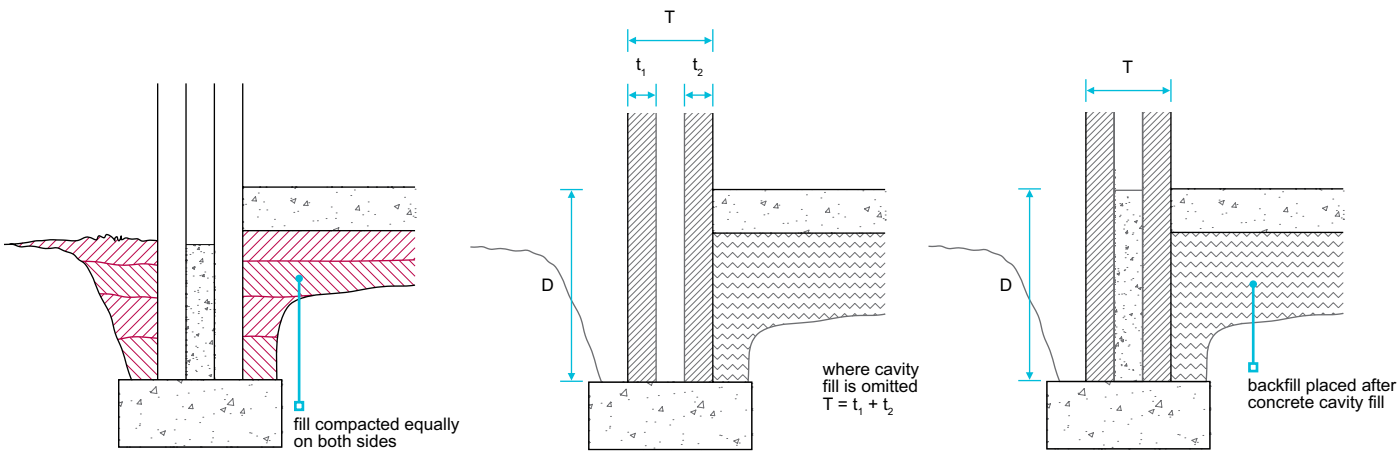

Table 2: Acceptable D:T of temporary retaining walls

Depth (D) of filled trench	Minimum thickness (T) of wall leaf supporting fill
Up to 1100mm	200mm
1100-1400mm	300mm
1400-1700mm	400mm
1700-2000mm	500mm

This guidance is only applicable to the temporary condition and where problems such as hydrostatic pressure are not present.

Concrete cavity fill

A minimum 225mm clear cavity below the DPC should be maintained. When specialised foundations are used, including those for timber framed buildings, the minimum clear cavity depth may be reduced to 150mm below the DPC, provided that weep holes and other necessary measures are taken to ensure free drainage.

5.1.13 Durability

Also see: Chapters 4.3, 6.1 and BS EN 1996-1-1

Substructure and walls below the DPC shall be capable of supporting their intended loads and, where necessary, be resistant to frost action, sulfates and other harmful or toxic materials. Issues to be taken into account include:

a) brickwork

b) blockwork.

Frost damage occurs on saturated masonry exposed to freezing conditions. Bricks, blocks and mortars located 150mm above and below ground level are the most likely to be damaged by frost.

Masonry walls below the DPC should be designed and constructed as described in Chapter 6.1 'External Masonry Walls'.

Recommendations for the design strength of bricks, masonry blocks and mortars are given in BS EN 1996-1-1.

Brickwork

Bricks should be of suitable durability, especially in the outer leaf below the DPC, or where they could be frozen when saturated. Bricks used in retaining walls should be suitable for the exposure and climate, as recommended by the manufacturer.

Clay bricks should comply with BS EN 771, which classifies bricks according to their durability designation (F) and to the content of active soluble salts (S).

F0	Not freeze/thaw resistant and should not be used externally
F1	Moderately freeze/thaw resistant
F2	Freeze/thaw resistant
S1	Normal active soluble salts
S2	Low active soluble salts

Generally, bricks are designated to F1,S2 or F1,S1. If in doubt as to suitability, bricks of F2,S2 or F2,S1 should be specified, or the manufacturer consulted and written confirmation obtained in relation to:

- geographical location
- location in the structure.

Calcium silicate bricks for use below DPC should be at least compressive strength class 20.

Blockwork

Concrete blocks for use below the DPC should meet BS EN 771 and one of the following:

- minimum density of 1500kg/m^3
- minimum compressive strength of 7.3N/mm^2
- assessed in accordance with Technical Requirement R3.

Where it is necessary to resist sulfate attack and ensure adequate durability, blocks made with sulfate-resisting cement and/or a higher than normal cement content should be used.

Where there is doubt regarding the suitability of the block, particularly where acids or sulfates occur, written confirmation of its suitability should be obtained from the manufacturer in relation to:

- geographical location
- location in the structure.

5.1.14 Mortar

Also see: Chapter 6.1

Substructure and walls below DPC level shall use mortar which is suitable for the location and intended use. Issues to be taken into account include:

a) mortar mix

b) sulfate resistance.

Mortar mix

Mortar should comply with the design and should take account of the strength, type and location of the masonry. The selection of mortar for use below the DPC should follow the recommendations given in BS EN 1996-1-1.

The use of proprietary mortars and admixtures should:

- account for the type of masonry unit and its location
- only be used in accordance with the manufacturer's recommendations.

For non-clay bricks or blocks, mortar should be used in accordance with the brick manufacturer's recommendations.

Sulfate resistance

Sulfate-resisting cement should be used where:

- sulfates are present in the ground, ground water or masonry
- recommended by the brick manufacturer.

In such cases, sulfate-resisting cement to BS EN 197-1 should be used.

5.1.15 Wall ties

Substructure and walls below the DPC shall use wall ties suitable for their intended use.

Wall ties should comply with BS EN 845-1 or be assessed in accordance with Technical Requirement R3.

Where cavity insulation batts or slabs start below DPC level, the vertical and horizontal spacing of wall ties should be compatible with the spacing to be used above DPC level.

5.1.16 Blinding

Blinding shall provide a suitable surface for the materials above.

Infill should be sufficiently blinded to receive the concrete, and DPM where required, using the minimum thickness necessary to give a suitable surface.

Concrete blinding may be needed where voids in the fill could result in loss of fines from the blinding. Where hardcore fill is used, smooth blinding, e.g. sand or other suitable fine material, is essential to avoid puncturing a sheet DPM.

Where the ground floor is to be reinforced, blinding should be firm and even, to give good support for the reinforcement and to maintain the design cover using reinforcement stools, where appropriate.

5.1.17 Ground floor slab and concrete

Also see: Chapter 3.1

Ground-bearing floors shall be of adequate strength and durability, and use concrete mixed and reinforced as necessary to support floor loads safely and resist chemical and frost action.

Ground-bearing concrete floor slabs should be at least 100mm thick, including monolithic screed where appropriate.

5.1.18 Laying the ground-bearing floor slab

Also see: Chapters 3.1 and 9.3

Ground-bearing floors shall be reasonably level and effectively impervious to moisture.

All underfloor services and ducts should be installed and tested before concreting, where appropriate.

Care should be taken to ensure that all joints and junctions between DPMs, wall DPCs or tanking in substructure walls are undamaged, especially while the concrete for the ground slab is being poured.

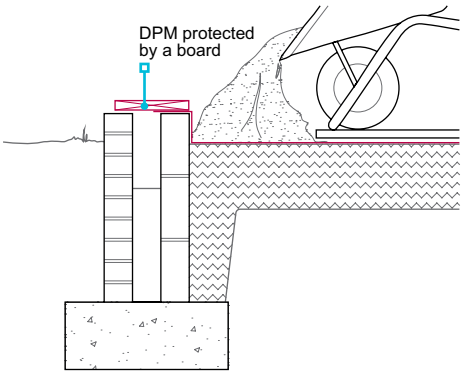

5.1.19 Damp proof course

Also see: Chapters 5.4 and 6.1

Damp proof courses shall adequately resist moisture from reaching the inside of the building. Issues to be taken into account include:

a) positioning of DPC's

b) DPC materials.

Positioning of DPC's

DPCs should be:

- positioned a minimum of 150mm above finished ground or paving level
- linked with any DPM
- of the correct width and fully bedded
- either welded or lapped by 100mm minimum
- impermeable.

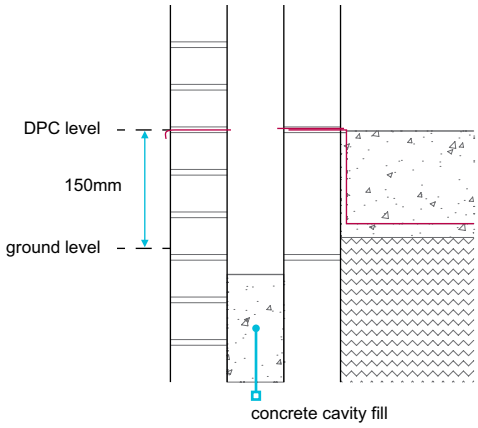

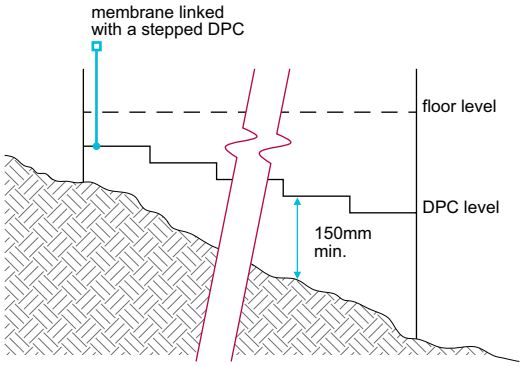

Where homes are 'stepped' on a sloping site, care should be taken to link DPCs and DPMs so that all parts of each home are protected.

DPC materials

Acceptable materials for DPCs include:

Bitumen based materials	BS 6398
Polyethylene, (should not be used below copings,in parapets or for tanking)	BS 6515 0.5mm minimum
Proprietary materials	Technical Requirement R3

DPCs and flexible cavity trays should be of the correct dimensions. At complicated junctions, preformed cavity trays of the correct type and shape should be used.

Brick DPCs are only suitable to resist the upward movement of moisture and should:

- consist of two courses of engineering bricks, laid broken bond
- be bedded and jointed in a 1:¼:3, cement:lime:sand, or equivalent, mortar.

5.1.20 Damp proofing concrete floors

Ground-bearing floors shall resist the passage of moisture to the inside of the home.

Ground-bearing concrete floor slabs should be protected against ground moisture by providing a continuous damp proof membrane (DPM). The DPM should:

- have sealed laps of at least 300mm wide
- link with wall DPCs to form an impervious barrier to prevent moisture reaching the interior of the dwelling
- take account of possible differential movement.

Care should be taken not to trap moisture when a combination of damp proofing and vapour control layers are used.

When the DPM is located below the slab, a blinding layer of sand should be provided to fill voids in the hardcore and to minimise the risk of puncturing the membrane.

A clear cavity of at least 225mm below the DPC should be maintained. When specialised foundations are used, including those for timber framed buildings, this depth may be reduced to 150mm below the DPC where weep holes are provided and other necessary measures are taken to ensure that the cavity can drain freely.

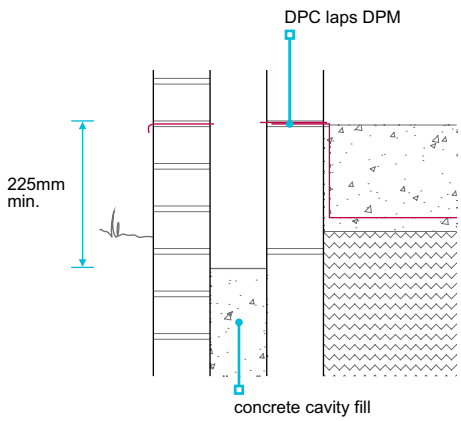

Where homes are stepped down a sloping site, the DPCs and DPMs should be linked so that all parts of each home are protected. The guidance in Chapter 5.4 'Waterproofing of basements and other below ground structures' should be followed where steps between floor slabs are greater than 150mm.

Suitable materials for DPM's include:

- 1200 gauge (0.3mm) polyethylene sheet
- minimum 1000 gauge (0.25mm) polyethylene sheet where it complies with Technical Requirement R3
- bitumen sheet to BS 6398
- materials that comply with Technical Requirement R3.

5.1.21 Thermal insulation

Also see: Chapters 6.1, 9.3 and BRE Report 'Thermal insulation: avoiding risks'

Ground-bearing floors and walls below the DPC shall be thermally insulated to comply with building regulations and be suitable for the intended use. Issues to be taken into account include:

a) floor insulation
b) wall insulation
c) cold bridging.

Floor insulation

Thermal insulation materials for use below ground-bearing slabs should have:

- appropriate density for the location
- low water absorption.

Insulation to be positioned below both the slab and DPM should be resistant to ground contaminants. The following materials are acceptable for use as insulation:

- expanded polystyrene boards (grade EPS 70) to BS EN 13163
- a proprietary material that complies with Technical Requirement R3.

Wall insulation

Cavity insulation materials, super lightweight blocks, blocks with face bonded insulation or integral insulation should be:

- manufactured and used to comply with a British Standard and relevant code of practice, or
- used in compliance with Technical Requirement R3.

The thickness of materials should be suitable for the required level of performance:

England and Wales	See Clause 6.1.7.
Scotland	■ Not permitted to fill the full width of the cavity with any thermal insulants at the time of construction.
Northern Ireland and the Isle of Man	■ Not permitted to fill cavities with pumped thermal insulants at the time of construction.

Cold bridging

The design should ensure that any risk of cold bridging is minimised, especially at junctions between floors and external walls. Precautions include:

- extending cavity insulation below floor slab level
- linking floor and wall insulation
- providing perimeter insulation to floors
- facing supporting substructure with insulation – where homes are stepped or staggered, the wall forming the step or stagger may require insulation.

5.1.22 Installation of insulation

Installation of thermal insulation shall ensure that the full thermal performance of the floor is achieved.

Insulation boards should be tightly butted together to maintain insulation continuity. Where the insulation is turned up vertically at the edge of the slab, it should be protected whilst the concrete is being poured and tamped.

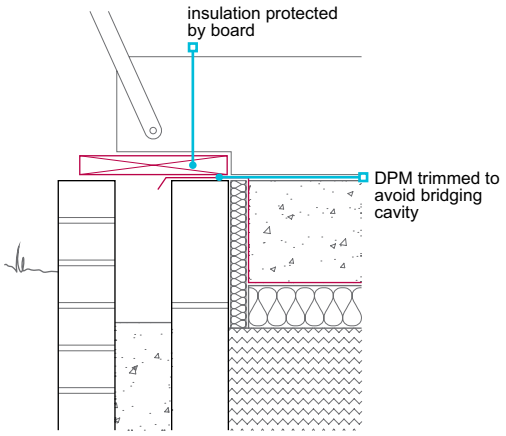

5.1.23 Further information

- *BRE Digest 433.*

Suspended ground floors

CHAPTER 5.2

This chapter gives guidance on meeting the Technical Requirements for suspended ground floors including those constructed from:

- **in-situ concrete**
- **precast concrete**
- **timber joists.**

5.2.1	Compliance	01
5.2.2	Provision of information	01
5.2.3	Contaminants	01
5.2.4	Proprietary systems	01
5.2.5	Transfer of loads: concrete floors	01
5.2.6	Reinforced concrete	02
5.2.7	Construction of suspended concrete ground floors	02
5.2.8	Transfer of loads: timber floors	02
5.2.9	Thermal insulation and cold bridging	03
5.2.10	Damp-proofing and ventilation	03
5.2.11	Floor finishes	04
5.2.12	Floor decking	04

NHBC

Raising Standards. Protecting Homeowners

5.2.1 Compliance

Also see: Chapters 2.1, 4.1, 4.2, 4.5 and 5.1

Suspended ground floors shall comply with the Technical Requirements.

Suspended ground floors that comply with the guidance in this chapter will generally be acceptable.

Ground floors should be constructed as suspended floors where:

- the depth of fill exceeds 600mm
- there is shrinkable soil that could be subject to movement (See Chapter 4.2 'Building near trees'), expansive materials or other unstable soils
- the ground has been subject to vibratory improvement
- ground or fill is not suitable to support ground-bearing slabs.

5.2.2 Provision of information

Designs and specifications shall be produced in a clearly understandable format, include all relevant information and be distributed to all appropriate personnel.

Design and specification information should be issued to site supervisors, relevant specialist subcontractors and suppliers, and include the following information:

- all necessary plan dimensions and levels related to identified benchmarks
- details of load-bearing walls
- minimum bearing dimensions
- information on all proposed underground services
- points of entry to the building for services
- details of trench backfill, infill and void formers
- details of junctions between DPM, DPC and tanking
- details of underfloor and floor edge insulation and cavity insulation, where relevant
- span and direction of structural members
- details of non-loadbearing walls.

5.2.3 Contaminants

Also see: Chapter 4.1, BRE Report 211 and Approved Document C1/2/3 Appendix 'Introduction to remedial measures'

Suspended ground floors shall be designed and constructed to ensure that adequate measures are taken against the adverse effects of ground contaminants, including adequate protection against radon gas.

Any contaminants in, or above, the ground should be identified to the satisfaction of NHBC, following the guidance given in the appropriate British Standard, and precautions against health hazards caused by contaminants should be taken.

Precautions acceptable to NHBC may be necessary to reduce the entry of radon gas; such conditions should be identified in the site investigation.

5.2.4 Proprietary systems

Proprietary suspended flooring systems shall have adequate strength and durability.

Proprietary concrete flooring systems should be designed in accordance with BS EN 1992-1-1. Where a system incorporates elements which cannot be designed to this standard, e.g. polystyrene infill blocks, the floor should be assessed in accordance with Technical Requirement R3.

5.2.5 Transfer of loads: concrete floors

Also see: Chapters 4.1, 4.2, 5.2 and BRE Report 211

Suspended ground floors shall be designed and constructed to transmit all loads safely to the supporting structure without undue movement. Issues to be taken into account include:

a) dead and imposed loads

b) end bearings.

Dead and imposed loads

In-situ:
Loads should be calculated in accordance with BS EN 1991-1-1.

Suspended in-situ concrete ground floors should be designed either:

- by an engineer in accordance with Technical Requirement R5, or
- in accordance with BS 8103-1.

Precast:
Loads should be calculated in accordance with BS EN 1991-1-1.

Precast concrete suspended ground floors should be:

- designed by an engineer in accordance with Technical Requirement R5
- proprietary systems which have been assessed in accordance with Technical Requirement R3, or
- chosen from the manufacturer's details which are based on recognised standards and codes of practice.

End bearings

In-situ:
Bearings on supporting walls should be designed either:

- by an engineer in accordance with Technical Requirement R5, or
- in accordance with BS 8103-1.

Precast:
Bearings on supporting walls should be as recommended by the manufacturer, and in no case less than 90mm.

5.2.6 Reinforced concrete

Also see: Chapter 3.1

Suspended ground floors shall use suitably mixed and reinforced concrete, which will achieve sufficient strength to support floor loads safely and be sufficiently durable to remain unaffected by chemical or frost action.

Guidance for the specification and use of in-situ concrete, additives and reinforcement is contained in Chapter 3.1 'Concrete and its reinforcement'.

5.2.7 Construction of suspended concrete ground floors

Also see: Chapter 6.4 '

Suspended ground floors shall be designed and constructed to ensure the safe support of the intended loads and be reasonably level.

In-situ:
Concreting should be carried out in accordance with:

- the design information
- relevant parts of NHBC guidance for concrete, including Chapter 3.1 'Concrete and its reinforcement'.

Precast:
Care should be taken to ensure that DPCs are not damaged or displaced. All sitework for precast concrete floors should be carried out in accordance with the manufacturer's recommendations.

5.2.8 Transfer of loads: timber floors

Also see: Chapters 4.3 and 6.4

Timber suspended ground floors, including the decking material, shall be designed and constructed to be suitable for their intended use. Issues to be taken into account include the:

a) support of self-weight, dead and imposed loads and limited deflection
b) safe transmission of loads to the supporting structure
c) adverse effects of shrinkage and movement.

Support of self-weight, dead and imposed loads, and limited deflection

Structural timber grades and sizes should be adequate for the spans and imposed loads. Where trimming is necessary, adequately sized timbers should be used.

Safe transmission of loads to the supporting structure

Joist hangers should be suitable for:

- the joist width and depth
- the strength of masonry
- the loading
- providing adequate end bearings to joists.

Sleeper walls should adequately support the floor joists, and joists should be correctly supported at masonry separating walls.

Shrinkage and movement

Strutting should be provided where required to limit the twisting of joists.

5.2.9 Thermal insulation and cold bridging

Also see: Chapter 9.3 and BRE report 'Thermal insulation: avoiding risks'

Suspended ground floors shall be insulated in accordance with building regulations to minimise thermal transmission through the floor and using materials suitable for the location and intended use.

Insulation should be installed to ensure that any risk of cold bridging is minimised, especially at junctions between floors and external walls. Cold bridging precautions include:

- extending cavity wall insulation below floor level
- providing perimeter insulation to floors.

Insulation below cast in-situ suspended ground floor slabs should be:

- placed on a suitable, compacted and even substrate
- of a material with low water absorption
- resistant to ground contaminants
- strong enough to support wet construction loads
- compatible with any DPM.

Insulation for timber floors may be either insulation quilt or rigid insulation.

Cavity wall insulation should extend below the floor insulation level.

Insulation for use above suspended concrete floors should be in accordance with Chapter 9.3 'Floor finishes'.

5.2.10 Damp-proofing and ventilation

Also see: Chapters 4.2, 5.1, 5.4, 6.1 and 9.3

Suspended ground floors shall be designed and constructed to resist the passage of moisture into the building. Issues to be taken into account include:

a) damp-proofing

b) ventilation.

Damp-proofing

Where DPMs are required, they should be linked with any DPCs in the supporting structure, in order to provide continuous protection from moisture from the ground or through the supporting structure.

DPMs should be properly lapped in accordance with Chapter 5.1 'Substructure and ground-bearing floors'.

In-situ concrete:
Dampness from the ground and supporting structure should be prevented from reaching the floor by using linked DPMs and DPCs to provide continuous protection.

Where there is a risk of sulfate attack, in-situ or oversite concrete should be protected with polyethylene sheet that is a minimum:

- 1200 gauge (0.3mm), or
- 1000 gauge (0.25mm) if assessed in accordance with Technical Requirement R3.

Precast concrete:
Additional damp-proofing may not be necessary where:

- the underfloor void is ventilated and DPCs are provided under bearings of precast floors in accordance with CP 102
- ground below the floor is effectively drained, if excavated below the level of the surrounding ground.

Where proprietary floor systems are used, adequate moisture-resistant membranes should be installed in accordance with the manufacturer's recommendations.

Vapour control layers may be necessary to protect floor finishes, and where used, should be positioned in accordance with the manufacturer's recommendations.

Timber ground floors:
Timber used for suspended ground floors should be treated or naturally durable, in accordance with Chapter 3.3 'Timber preservation (natural solid timber)', and the ground below the floor covered with:

- 50mm concrete or fine aggregate on a polyethylene membrane laid on 50mm sand blinding, or
- 100mm concrete.

In Scotland, the deemed-to-satisfy specification of the building regulations should be followed.

Ventilation

Ventilation should be provided to precast and timber suspended floors. This is generally provided by ventilators on at least two opposite external walls, with air bricks properly ducted in accordance with Chapter 6.1 'External masonry walls'. Where this is not possible, suitable cross ventilation should be provided by a combination of openings and air ducts. Ventilation should not be obtained through a garage.

Sleeper walls and partitions should be constructed with sufficient openings to ensure adequate through ventilation. If necessary, pipe ducts should be incorporated in adjoining solid floors, separating walls or other obstructions.Where underfloor voids adjoin ground bearing floors, ventilation ducts should be installed.

Void ventilation should be provided to whichever gives the greater opening area:

- 1500mm^2 per metre run of external wall
- 500mm^2 per m^2 of floor area.

In the case of timber floors, ventilators should be spaced at no more that 2m centres and within 450mm of the end of any wall.

A minimum ventilation void of 150mm should be provided below the underside of precast concrete and timber suspended floors. On shrinkable soil where heave could take place, a larger void is required to allow for movement according to the volume change potential.

- high volume change potential – 150mm (300mm total void)
- medium volume change potential – 100mm (250mm total void)
- low volume change potential – 50mm (200mm total void).

5.2.11 Floor finishes

Finishes to concrete suspended ground floors shall be protected where necessary, against damp, condensation or spillage.

Guidance for suitable floor finishes is given in Chapter 9.3 'Floor finishes'. Care should be taken to prevent trapping any water spillage below timber floors.

Other floor decking should be assessed in accordance with Technical Requirement R3 and should be installed in accordance with manufacturers' recommendations.

5.2.12 Floor decking

Floor decking shall be suitable for the intended purpose and be correctly installed.

Acceptable installation details and materials used for decking are detailed in Chapter 6.4 'Timber and concrete upper floors'.

Drainage below ground

CHAPTER 5.3

This chapter gives guidance on meeting the Technical Requirements for foul, surface water and ground water drainage systems.

This chapter does not apply to the adoption of sewers under Section 104 agreement of the Water Industry Act 1991 or the Sewerage (Scotland) Act 1968. For information on standards required for adopted sewers, contact the local sewerage undertaker and other relevant authorities.

5.3.1	Compliance	01
5.3.2	Provision of information	01
5.3.3	Preliminary work	01
5.3.4	Foul and surface water disposal	02
5.3.5	Drainage system performance	03
5.3.6	Ground water drainage	03
5.3.7	Design to avoid damage and blockages	03
5.3.8	Durability	07
5.3.9	Septic tanks and cesspools	08
5.3.10	Septic tanks	09
5.3.11	Surface water soakaways	11
5.3.12	Component requirements	13
5.3.13	Excavation	13
5.3.14	Protection of pipework	14
5.3.15	Laying pipework	15
5.3.16	Protection of work	16
5.3.17	Testing	16

NHBC

Raising Standards. Protecting Homeowners

5.3.1 Compliance

Also see: Chapter 2.1

Drainage systems shall comply with the Technical Requirements.

Below ground drainage that complies with the guidance in this chapter will generally be acceptable.

All drainage schemes require the approval of the building control authority. Local sewerage undertakers may impose additional requirements and restrictions. Both should be consulted early, especially where the drainage system is to be adopted under a Section 104 agreement of the Water Industry Act 1991 or Sewerage (Scotland) Act 1968. The system may need to be inspected and tested by the sewerage undertaker, as well as by the local authority, building control authority and NHBC.

Satisfactory outfall disposal is essential where a septic tank is installed. In England and Wales, Environment Agency consent may be required to discharge effluent from a septic tank. In Northern Ireland, the NIEA should approve proposals; in Scotland, the local authority and, where appropriate, the river purification authority should approve proposals.

Ground conditions may preclude the use of septic tanks in some locations. In all cases, NHBC will require evidence of a satisfactory percolation test where a septic tank drainage system is being installed.

For surface water discharge into a watercourse, the permission of the Environment Agency is required in England and Wales. A 'consent to discharge' is required from the Department of the Environment in Northern Ireland. In Scotland, the local authority and, where appropriate, the river purification authorities should be consulted.

In all cases:

- relevant local authorities should be consulted and appropriate permissions sought before sitework begins
- NHBC will require evidence of a satisfactory percolation test where a septic tank drainage system is being installed.

Table 1: Guide to relevant authority

	Septic tank discharge	Surface water discharge into a watercourse
England and Wales	Environment Agency DEFRA	
Northern Ireland	Northern Ireland Environment Agency	
Scotland	Local authority River purification authority	Local authority River purification authority Scottish Environmental Protection Agency

5.3.2 Provision of information

Designs and specifications shall be produced in a clearly understandable format, include all relevant information and be distributed to all appropriate personnel.

Design and specification information should be issued to site supervisors, relevant specialist subcontractors and suppliers, and include the following information:

- Proposed drain layout.
- Invert levels and locations of existing sewers.
- Junctions.
- Ground floor levels of homes.
- External finished levels.
- Inspection and access points.
- Method of disposal of both foul and surface water.
- Position of any septic tank or cesspool in relation to adjacent buildings.
- Results of percolation tests where treated effluent disposal is through field drains.
- Length of field drains and their layout (including details of trench width as this is critical to the functioning of the system).
- Depth of field drains.
- Details of drains or sewers intended for adoption.

5.3.3 Preliminary work

Drainage systems shall be checked on site to ensure that the design can be achieved.

Check that the following are as specified in the design:

- invert levels and locations of existing sewers
- ground floor levels of homes
- external finished levels.

Percolation tests should be verified where treated effluent disposal is through field drains. The length of any field drains specified in the design should be accommodated within the site boundaries.

5.3.4 Foul and surface water disposal

Also see: BS EN 752, Clause 5.3.11 and BRE Digest 365

Drainage systems shall be designed in accordance with relevant codes and standards to convey foul effluents and surface water satisfactorily to an appropriate outfall. Issues to be taken into account include:

a) connections to sewers
b) connections to surface water disposal systems
c) rights of connection to disposal systems
d) compatibility with other systems
e) capacity of private sewers
f) treatment plants for more than one home.

Connections to sewers

Connections to public sewers require the agreement of the responsible authority, which should be consulted as to the type and position of the connection.

Connections to private sewers require the agreement of the owners of the sewer. This should be obtained as part of the design process. Where the private sewer subsequently discharges into a public sewer, the local sewerage undertaker should be notified of the proposal.

Connections to surface water disposal systems

Surface water drainage is generally required to be separated from foul water drainage. Where permitted, surface water may be discharged into the main public surface water drains or directly into natural watercourses, ponds or soakaways, as appropriate. Surface water should not discharge to:

- septic tanks
- cesspools
- separate foul sewers.

For large or complicated homes, the volume of surface water to be disposed should be calculated in accordance with BS EN 12056-3.

Rights of connection to disposal systems

A legal right must exist when connecting drains to an outfall.

Compatibility with other systems

The drainage system should be compatible with the main sewerage system:

- with separate systems for foul water and surface water
- with separate systems where foul water is connected to the main sewer, while surface water disposal is by soakaways or other suitable means, or
- as a combined system.

Where the sewerage undertaker permits surface water drains to be connected to a foul water system:

- an interceptor should be installed on the surface water side of the foul sewer junction, or
- trapped gullies should be used.

Where ground water drains are connected to surface water drains, there should be a silt trap on the ground water side of the junction.

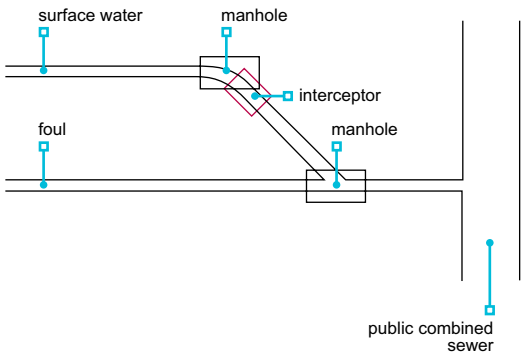

Capacity of private sewers

Private drainage systems should be:

- in accordance with BS EN 752
- sufficient to cope with the intended capacity.

Where an existing private drainage system is to be extended, or where the capacity is to be increased, sufficient investigation, measurement and calculation should be undertaken to ensure that all parts of the private system are of adequate capacity.

Treatment plants for more than one home

Small sewage treatment works for more than one home should be designed in accordance with BS 6297.

Discharge from the waste water treatment plant should be:

- sited at least 10m away from water courses and homes
- designed by a suitably qualified engineer.

5.3.5 Drainage system performance

Also see: Chapter 4.1, 8.1, BRE Report 211 and BRE Report 212

Drainage shall be suitably located and prevent health hazards. Issues to be taken into account include:

a) ventilation of drainage systems
b) prevention of gases entering the home
c) siting of septic tanks and cesspools
d) pumped systems.

Ventilation of drainage systems

Ventilation of drains is normally achieved by ventilating discharge stacks.

Air admittance valves which comply with Technical Requirement R3 may be used in some homes to prevent trap seal siphonage. An open vent is generally required at the head of common drainage systems, and where the discharge pipe is the only vent for a septic tank or cesspool.

Prevention of gases entering the home

Where special precautions are necessary (e.g. sealing drains where they enter the building) to reduce the entry of gases such as radon or landfill gas, such precautions should be acceptable to NHBC.

Siting of septic tanks and cesspools

Septic tanks and cesspools should be:

- a minimum of 7m from homes
- a maximum of 30m from vehicular access to permit emptying.

In Scotland, a minimum distance of 5m from homes and boundaries is acceptable for septic tanks.

Pumped systems

Where a gravity system is not possible, pumped systems may have to be used and should be designed in accordance with BS EN 752 and BS 6297. The installation should include:

- a holding tank of sufficient volume to contain 24 hours of domestic effluent based on 120L/150L per head per day
- a suitable warning system providing visual and/or audible signals to indicate malfunction
- suitable equipment housing.

5.3.6 Ground water drainage

Ground water drainage shall convey excess ground water to a suitable outfall. Issues to be taken into account include:

a) layout of pipes
b) pipe construction.

Layout of pipes

Where ground water drainage is required, depending on the site contours and ground conditions, it may be designed as:

- a natural system
- a herringbone system
- a grid system
- a fan-shaped system
- a moat system.

Pipe construction

Pipe perforations should be holes or slots to suit the nature of the ground.

Ground water drain systems connected to foul, surface water or combined drains should discharge into the drain through a catchpit. Where suitable, ground water drainage may discharge into a soakaway, preferably through a catchpit or into a watercourse.

5.3.7 Design to avoid damage and blockages

Also see: Chapter 4.2

Drainage systems shall minimise the risk of damage and blockage. Issues to be taken into account include:

a) ground stability
b) pipe runs
c) pipe sizes
d) gradients
e) access and connections
f) drainage covers and gully grids
g) ground water
h) flooding.

Ground stability

Proper allowance should be made for ground movement.

Pipes should have flexible joints and additional precautions taken to prevent leakage where required. Where ground movement could be significant, for example in made-up ground or clay soils, the following issues should be taken into account:

- the use of flexible pipes and flexible joints
- design gradients that are steeper than the minimum requirements for flow rate and pipe size
- a support system designed by an engineer in accordance with Technical Requirement R5
- conditions where ground movement is likely to adversely affect the drain.

In non-uniform or saturated soils where movement at the trench bottom can be expected, soft spots should be removed and replaced with suitable material. Immediately after excavation, the protective blinding should be placed in the trench bottom.

Pipe runs

Pipe runs should be designed to maintain a self-cleansing velocity (0.7 m/s). They should be as straight as practicable with minimal changes of direction. Bends should only occur in, or next to, inspection chambers and manhole covers. Curves should be slight so that blocked pipes can be cleared.

Pipe sizes

Pipe sizes should be designed for the maximum peak load in accordance with BS EN 752.

Ground water drains and soakaways should be designed with sufficient capacity for normal weather conditions.

Gradients

Design gradients should:

- be as even as practicable
- where flows are less than 1.0L/second, gradients for 100mm diameter pipes should not be flatter than 1:40
- where peak flows exceed 1.0L/second, the gradients in Table 2 may be used:

Table 2: Minimum gradients

Pipe diameter (mm)	Minimum gradient
100	1:80
150	1:150

Where peak flows are greater than 1.0L/second, 100mm pipes should serve a minimum of one WC and 150mm pipes should serve a minimum of five.

Access and connections

To ensure that every length of drain can be rodded, the design should include appropriately located access points, such as:

- rodding eyes
- access chambers
- inspection chambers
- manholes.

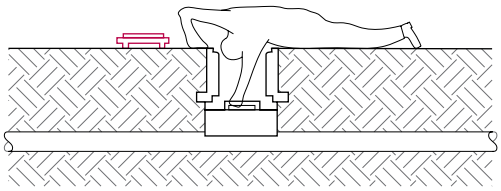

access chamber

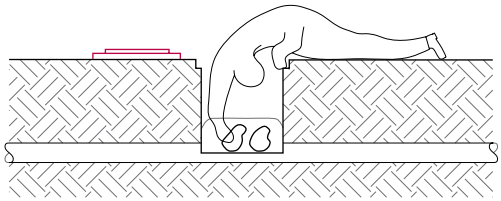

inspection chamber

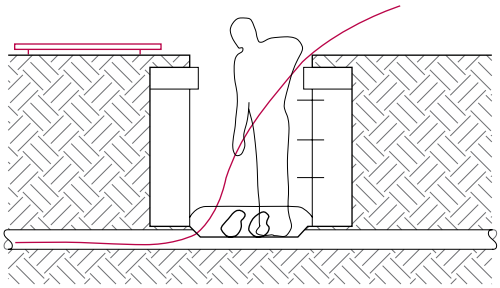

manhole

All access points should be located as shown in the design information and should:

- be accessible for rodding and cleaning
- not cross boundaries or kerb lines.

Inspection chambers and manholes should:

- be of sufficient size for the depth of invert, and
- the invert depth for the fitting or chamber should not exceeded those given in Table 3.

Table 3: Minimum dimensions for access fittings and chambers

Type		Depth to invert from cover level (m)	Internal sizes		Cover sizes	
			Length x width (mm x mm)	Circular (mm)	Length x width (mm x mm)	Circular (mm)
Rodding eye			As drain but min. 100			Same size as pipework(1)
Small access fitting	150 dia. 150 x 100	0.6 or less, except where situated in a chamber	150 x 100	150	150 x 100(1)	Same size as access fitting
Large access fitting	225 x 100		225 x 100	225	225 x 100(1)	Same size as access fitting
Shallow inspection chamber		0.6 or less 1.2 or less	225 x 100 450 x 450	190(2) 450	– Min. 430 x 430	190(1) 430
Deep inspection chamber		Greater than 1.2	450 x 450	450	Max. 300 x 300(3)	Access restricted to max. 350(3)

Notes
1 The clear opening may be reduced by 20mm in order to provide further support for the cover and frame.
2 Drains up to 150mm.
3 A larger clear opening cover may be used in conjunction with restricted access. The size is restricted for health and safety reasons to deter entry.

Table 4: Minimum dimension for manholes

Type	Size of largest pipe (DN) (mm)	Minimum internal dimensions(1)		Min. clear opening size(1)	
		Rectangular length and width (mm)	Circular diameter (mm)	Rectangular length and width (mm)	Circular diameter (mm)
Manhole up to 1.5m deep to soffit	Equal to or less than 150 225 300 Greater than 300	750 x 675(7) 1200 x 675 1200 x 750 1800 x (DN+450)	1000(7) 1200 1200 The larger of 1800 or (DN+450)	750 x 675(2) 1200 x 675(2)	NA(3)
Manhole greater than 1.5m deep to soffit	Equal to or less than 225 300 375-450 Greater than 450	1200 x 1000 1200 x 1075 1350 x 1225 1800 x (DN+775)	1200 1200 1200 The larger of 1800 or (DN+775)	600 x 600	600
Manhole shaft(4) greater than 3.0m deep to soffit pipe	Steps(5)	1050 x 800	1050	600 x 600	600
	Winch(6)	900 x 800	900	600 x 600	600
	Ladder(5)	1200 x 800	1200		

Notes
1 Larger sizes may be required for manholes on bends or where there are junctions.
2 May be reduced to 600 x 600 where required by highway loading restrictions and subject to a safe system of work being specified.
3 Not applicable due to working space needed.
4 Minimum height of chamber in shafted manhole 2m from benching to underside of reducing slab.
5 Minimum clear space between ladder or steps and the opposite face of the shaft should be approximately 900mm.
6 Winch only; no steps or ladders, permanent or removable.
7 The minimum size of any manhole serving a sewer, i.e. any drain serving more than one home, should be 1200mm x 675mm rectangular or 1200mm diameter.
8 Tables 3 & 4 have been reproduced from Tables 11 and 12 of Approved Document H by permission of HMSO.

Inspection chambers and manholes may be one of the following types:

- Open, half-round section channel with suitable benching.
- Closed access, where covers have to be removed to gain access to the pipe.

Side branches to inspection chambers and manholes should discharge into the main channel no higher than half pipe level. Connections should be made obliquely in the direction of flow.

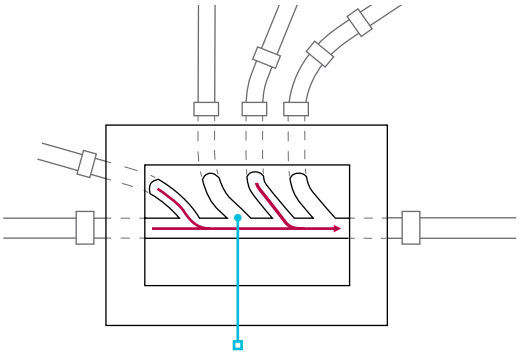

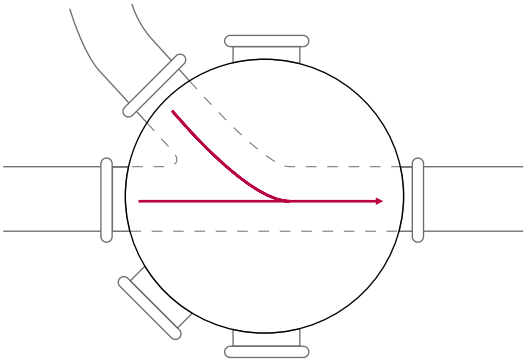

Traditional construction

The minimum specification for traditional manholes and inspection chambers is as follows:

Base	Minimum 100mm concrete.
Walls	Brick, blockwork or concrete should be appropriate for the ground conditions. 100mm minimum thickness is suitable for depths up to 0.9m where no vehicular traffic loads are encountered and there is no ground water pressure. Elsewhere, 200mm minimum thickness should be provided.
Rendering	Where required, rendering should be applied to the external faces of the wall.
Benching	Benching should be steel trowelled to provide: ■ a smooth finish ■ rounded corners ■ a fall of not less than 1:12. 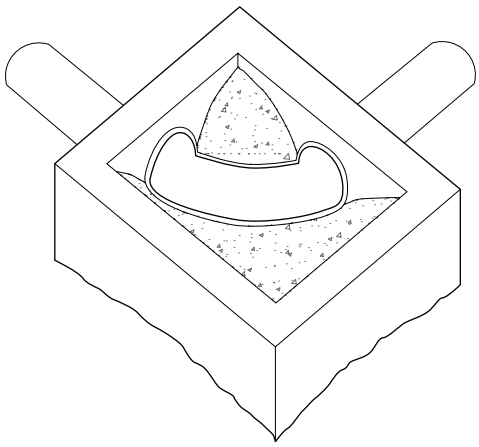

Clay bricks for manholes should comply with BS EN 771 and:

- be of low active soluble salt content
- have a minimum compressive strength of 48N/mm^2.

Engineering bricks are also suitable.

Concrete bricks for manholes should:

- comply with BS EN 771
- have a minimum crushing strength of 48N/mm^2 with a minimum cement content of 350kg/m^3 for foul drainage.

Calcium silicate bricks should comprise strength class 20 or above for foul drainage situations.

Proprietary systems

Proprietary systems should be installed in accordance with manufacturers' instructions.

Proprietary manholes should not be used at a depth greater than the manufacturer's instructions.

Adaptors, couplers and sealing rings should be:

- installed correctly and in accordance with the manufacturer's instructions
- treated using the lubricants and solvents specified.

Drainage covers and gully grids

Manhole covers and gully grids should be of the correct type for the proposed location in accordance with Tables 5 and 5a.

Manhole covers used within buildings should be airtight and mechanically secured. Covers used for septic tanks, cesspits and settlement tanks should be lockable.

Manholes should be constructed or installed at the correct level so that the covers will align with the adjacent ground.
Gullies should be adequately:

- bedded
- set level
- square and kerbed.

Table 5: Type of covering and grid required for inspection and manhole covers and frames

Group 1	Areas which can only be used by pedestrians and cyclists.
Group 2	Footways, pedestrian areas and comparable areas, car parks or car parking decks.
Group 3	For gully tops installed in the area of kerbside channels of roads which when measured from the kerb edge, extend a maximum of 0.5m into the carriageway and a maximum of 0.2m into the footway.
Group 4	Carriageways of roads, including pedestrian streets, hard shoulders and parking areas, and suitable for all types of road vehicles.

Proprietary items, e.g. covers to plastic manholes, should be in accordance with manufacturers' recommendations.

Table 5a: Gully grids in carriageways

Grade B	For use in carriageways of roads with cars and slow-moving normal commercial vehicles.
Grade A class 2	For use in carriageways of roads.
Grade A class 1	For use in carriageways of roads (gully grids of permanent non-rock design).

Ground water

Foul and surface water drainage systems should prevent the ingress of ground water.

Flooding

Where there is a risk of flooding, the advice of the relevant river authority should be followed.

5.3.8 Durability

Also see: Chapter 3.1 and 6.1

Drainage systems shall be adequately durable and protected against damage. Issues to be taken into account include:

a) **loads from foundations**
b) **bedding of pipes**
c) **loads from overlying fill and traffic**
d) **drainage under buildings**
e) **chemicals in ground and ground water.**

Loads from foundations

Drains should be located so that foundation loads are not transmitted to pipes. Where drainage trenches are near foundations:

- foundation bottoms should be lower than adjacent trenches, or
- the drain should be re-routed to increase separation.

Where the bottom of a drainage trench is below foundation level, the trench should be filled with concrete to a suitable level.

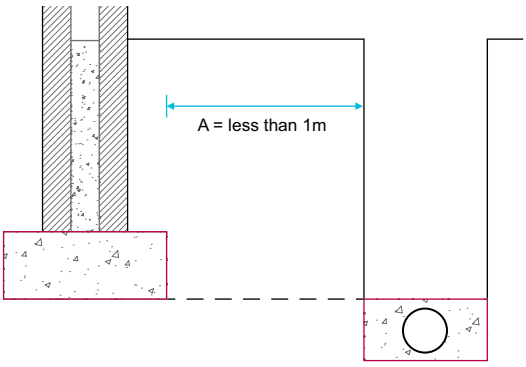

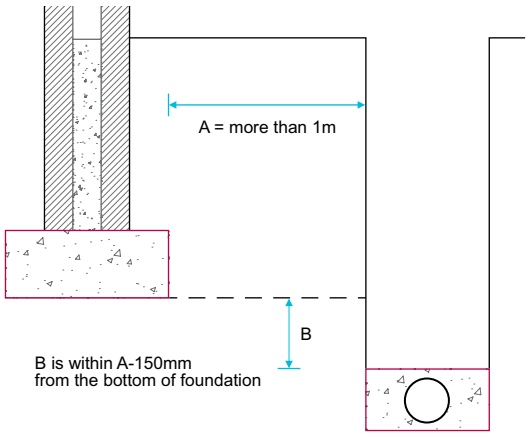

Bedding of pipes

Bedding should be in accordance with Clause 5.3.15.

Loads from overlying fill and traffic

Special protection may be required where pipes are near the ground surface or where they could be damaged by the weight of backfill or traffic load from above.

For flexible pipes, and where greater safety is needed, the bedding class and grading of backfill should comply with BS EN 13242, BS EN 1610 and BS EN 752.

When using proprietary systems assessed in accordance with Technical Requirement R3, pipes should be supported accordingly.

Drainage under buildings

Pipework support should take account of the ground conditions and ensure that the drainage is not adversely affected by ground movement.

Pipework under suspended floors should not be supported on ground or fill that is susceptible to movement without adequate provision being made to:

- maintain minimum design gradients
- protect against backfall
- protect against leakage.

Where drains are located beneath raft foundations or where ground movement is likely, the design of the pipework and support system should be carried out by a suitably qualified engineer in accordance with Technical Requirement R5.

See Clause 5.3.14 for 'Pipework passing through substructure walls'.

Chemicals in ground and ground water

Where the ground or ground water contains sulfates, concrete and masonry work may require special precautions.

5.3.9 Septic tanks and cesspools

Septic tanks and cesspools shall be correctly installed and be suitable for their intended use. Issues to be taken into account include:

a) capacity
b) access and ventilation
c) permeability of septic tanks and cesspools
d) connections to septic tanks and cesspools.

A septic tank is a form of treatment plant and requires a suitable outfall for treated effluent discharge, which is agreed with the relevant authority.

A cesspool is a tank which stores effluent and has to be emptied periodically.

Capacity

The capacity of the septic tank should be based on the number of people it will serve, using the formula: C = 180P + 2000

C = Capacity of tank in litres. Minimum 2700L.

P = Design population/potential occupancy. Minimum four occupants.

Cesspools are required to be at least 18m^3 capacity. A 45-day holding capacity calculated at 150 litres/head/day should be provided.

Access and ventilation

Septic tanks and cesspools should:

- be covered and ventilated
- be provided with access points for inspection, emptying, de-sludging and cleaning
- have the access points with lockable covers and no dimension less than 600mm.

The inlet and outlet of a septic tank should be provided with access for inspection.The inlet of a cesspool should be provided with access for inspection. Cesspools should have no openings except the inlet, the vent and the inspection access.

Permeability of septic tanks and cesspools

Septic tanks and cesspools should be impermeable to their contents and to subsoil water. They should be constructed of brickwork, concrete, glass reinforced concrete, glass reinforced plastics or steel.

Brickwork should be of engineering bricks, laid in cement mortar at least 220mm thick. In-situ concrete should be at least 150mm thick.

Connections to septic tanks and cesspools

The entry flow velocity should be restricted to reduce disturbance in the tank. Where the drain into the septic tank is less than 150mm in diameter; it should have a gradient no steeper than 1:50 for at least 12m.

Rodding and cleaning facilities should be provided at the connection with the tank.

5.3.10 Septic tanks

Septic tanks shall have suitable drainage connections. Issues to be taken into account include:

a) outfall
b) flow velocity
c) soakaways for septic tanks
d) field drains
e) underdrains.

Outfall

The designer should ensure at an early stage that consent for discharge will be given, or select an alternative method of drainage. Certain locations and ground conditions may preclude the use of septic tanks. Septic tank sewage systems should have:

- satisfactory outfall disposal
- placement that accounts for topography and ensures that water is drained away from the building.

Where a septic tank drainage system is to be installed, NHBC requires:

- evidence of a satisfactory percolation test
- copies of relevant consents and approvals before work commences.

Flow velocity

A dip pipe should be provided with:

- the top limb rising above scum level , and
- the bottom limb extending about 450mm below top water level.

Soakaways for septic tanks

Soakaways in porous subsoils

A soakaway may be used where the outfall from a septic tank is to discharge to a porous subsoil at a level above that of the winter water table. Soakaway constructions generally consist of an excavation filled with brick bats or other large pieces of inert material, or unfilled but lined, e.g. with dry laid brickwork or precast concrete (porous or perforated) rings, from which the effluent may percolate into the surrounding ground. Proprietary septic tanks should be assessed in accordance with Technical Requirement R3.

Soakaways which are not filled should be covered by a slab incorporating an inspection cover.

The size of the soakaway should be determined as described in this chapter and the area of the bottom of the soakaway should equal the area of trench bottom in Chart 1 below.

Where the porous strata is overlaid by less permeable subsoil, a borehole may be permitted by the appropriate authority.

Soakaways in less porous subsoils

In less porous subsoils, a sub-surface irrigation system may be used, which should be designed:

- using approved means to determine the percolation rate
- according to the area of sub-surface drainage from which the length of land drain can be found, determined by the following procedure.

Percolation test procedure for septic tanks:

Step 1	Excavate a hole 300mm square and 250mm deep below the proposed invert level of the land drain.
Step 2	Fill with water to depth of 250mm. As an aid, mark a stick 250mm from one end, place in the hole and fill to the mark. Allow the water to drain away overnight.
Step 3	Refill to a depth of at least 250mm and note the time taken (in seconds) to drain away completely.
Step 4	Repeat the exercise two more times and calculate the average of the three results, as follows: percolation value (s) = time to drain away (seconds) / depth of water (mm)

The results of the percolation test should be used in accordance with Table 6 to determine a suitable method of drainage.

Table 6: Suitable methods of drainage

Percolation value (s)	Suitability for less porous subsoils
Up to 100	Chart 1 to determine the field drain trench area. Chart 2 to determine the pipe length to provide this area.
100 to 140	As above, but underdrains are also necessary.
Over 140	The soil is unsuitable for field drains.

Table 7: Capacity based on potential occupancy

Number of persons/bed spaces	Minimum capacity (litres)
< 4	2700
4	2720
5	2900
6	3080
7	3260
8	3440
9	3620
10	3800

Chart 1: Field drains trench area

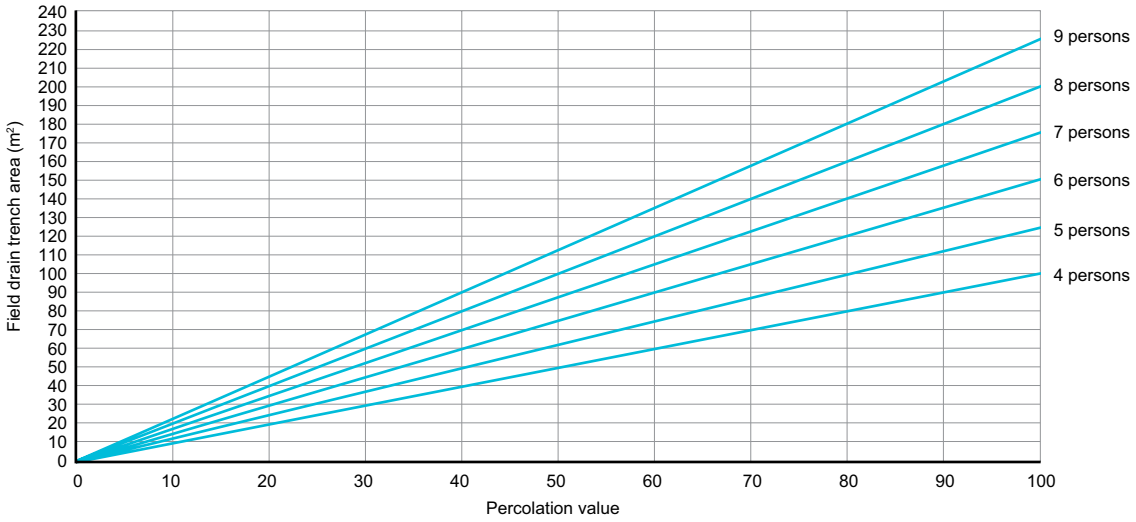

Chart 2: Field pipe length

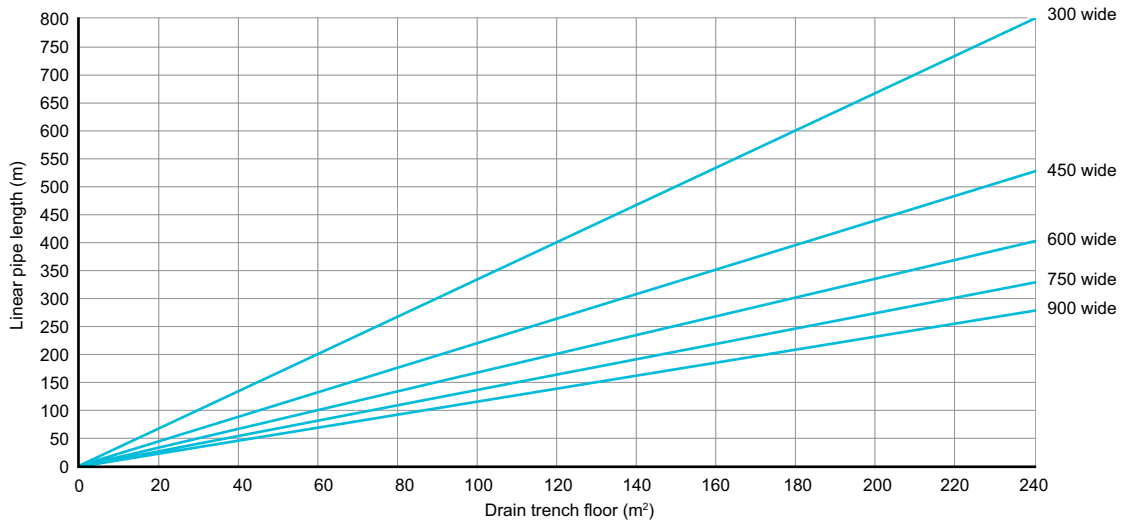

Field drains

Field drains should be:

- sited according to topography, ensuring that water is drained away from the building
- formed with perforated pipe, laid at least 500mm below the surface
- laid in trenches with a uniform gradient less than 1:200 with undisturbed ground 2m wide between trenches and at least 8m from any building and 10m from any water course
- laid on a 150mm bed of clinker, clean gravel or broken stone (20mm–50mm grade) and trenches filled to a level 50mm above the pipe and covered with strips of plastic material to prevent entry of silt
- backfilled with as dug material.

Wherethe level of the water table is expected to rise in the winter months to within 1m of the field drain invert, it is not acceptable to use subsurface irrigation.

Underdrains

Where underdrains are necessary, drainage trenches should be constructed a minimum of 600mm deeper than the pipe level specified in the design.

The lower part of the drainage trenches should be filled with pea gravel. A second system of drainage pipes should be laid on the bottom of the trenches to convey surplus drainage to an outfall in a surface ditch or watercourse.

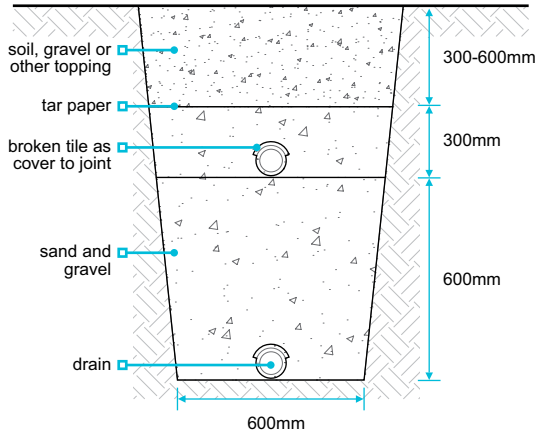

5.3.11 Surface water soakaways

Also see: BRE Digest 365

Soakaway drainage shall be sited and constructed to provide adequate short term storage for surface water and adequate percolation into the surrounding ground. Issues to be taken into account include:

a) soakaway location

b) soakaway design.

Soakaway location

Soakaways should be:

- built on land lower than, or sloping away from, buildings
- sited at least 5m from the foundations of a building
- sited to take account of topography, ensuring that water is drained away from the building
- in soil of low permeability, only be provided where no alternative system is available.

Soakaway design

NHBC may require a percolation test for a soakaway, especially where there is:

- doubt about the ground,
- a large quantity of run-off into the soakaway which may swamp the ground.

Where the ground is free draining and granular, a test may not be necessary.

In soil, chalk and fill material subject to modification or instability, the advice of a specialist geotechnologist should be sought regarding the siting and suitability of soakaways.

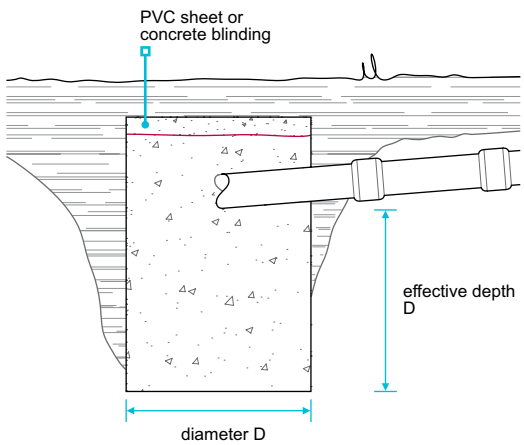

Small soakaways

Small soakaways are holes filled with granular material, e.g. broken brick, crushed rock or gravel, with particle size 10mm to 150mm.

PVC sheet or concrete blinding should be laid over the fill to prevent topsoil being washed down into the soakaway.

Large soakaways

Large soakaways consist of a pit lined with dry jointed or honeycomb brickwork.

Alternatively, precast perforated concrete rings or segments may be laid dry and surrounded with granular material.

The volume of large soakaways should be calculated to ensure suitable capacity.

Percolation test procedure for surface water soakaway

The rate at which water will disperse into the ground depends on the permeability of the ground, which varies with soil type. The percolation test provides an assessment of how the ground drains.

As the test hole can be used as part of a soakaway, it should be:

- dug in a place that could be used as a soakaway
- at least 5m from the foundations of a building
- to the same depth as the proposed drain.

Percolation test procedure for surface water soakaways

Step 1	Bore a hole 150mm in diameter with an auger, to a depth of one metre.
Step 2	Fill with water to depth of 300mm. As an aid, mark a stick 300mm from one end, place in the hole and fill up to the mark. It takes approximately 5.5 litres to fill a volume of this size.
Step 3	Observe the time taken in minutes for the water to soak away.
Step 4	Where possible, the test should be repeated and the average time used.
Step 5	A second group of tests are carried out after the hole has been bored out to a depth of two metres, still using a 300mm depth of water.
Step 6	Where the soil appears to become more permeable with depth, it may be useful to deepen and retest the bore in one-metre stages.

Design of soakaway

The relationship between the diameter or effective depth required for a soakaway, to suit a given collection area, e.g. roof or paved surface, and the average time (T) resulting from the test is shown in the graph below.

The diameter and effective depth below invert level are assumed to be the same dimension (D).

Example

Test time (T) = 900 minutes

Plan area to drain = 150m²

From the graph below, the diameter and effective depth of the soakaway (D) are both 2.8m.

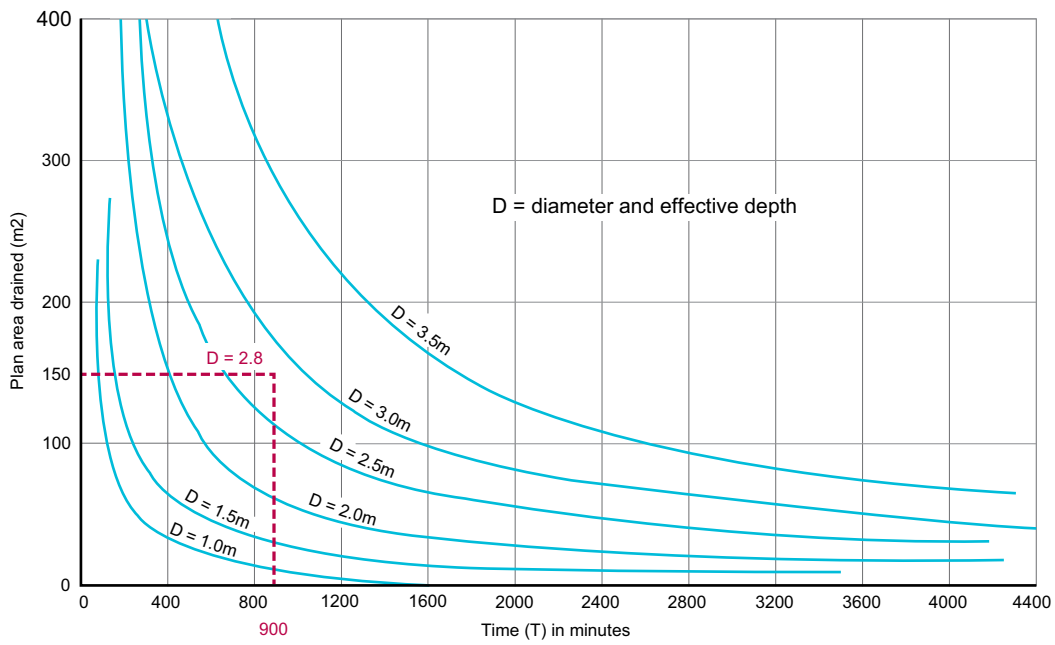

Where the ground is of low permeability; dig separate soakaways to drain smaller but distinct parts, for example:

- one side of a roof to one soakaway
- the other side to a second soakaway
- the driveway or yard to a third soakaway.

Where the permeability of the ground increases with depth; tests in the deepened trial holes will give shorter percolation times. It may be more cost effective to build a smaller soakaway at a greater depth below the surface.

5.3.12 Component requirements

Drainage systems shall be constructed with materials that ensure satisfactory service over the life of the system.

Components in accordance with the following standards will generally be acceptable:

BS 65	'Specification for vitrified clay pipes, fittings and ducts, also flexible mechanical joints for use solely with surface water pipes and fittings'.
BS 437	'Specification for cast iron drain pipes, fittings and their joints for socketed and socketless systems'.
BS 4660	'Thermoplastics ancillary fittings of nominal sizes 110 and 160 for below ground gravity drainage and sewerage'.
BS 4962	'Specification for plastics pipes and fittings for use as subsoil field drains'.
BS 5911	'Precast concrete pipes, fittings and ancillary products'.
BS EN 124	'Gully tops and manhole tops for vehicular and pedestrian areas'.
BS EN 295	'Vitrified clay pipe systems for drains and sewers'.
BS EN 588	'Fibre cement pipes for sewers and drains'.
BS EN 877	'Cast iron pipes and fittings, their joints and accessories for the evacuation of water from buildings. Requirements, test methods and quality assurance'.
BS EN 1401-1	'Plastics piping systems for non-pressure underground drainage and sewerage – Unplasticised poly (vinyl chloride) (PVC-U)'.
BS EN 1916	'Concrete pipes and fittings, unreinforced, steel fibre and reinforced'.
BS EN 13101	'Steps for underground man entry chambers. Requirements, marking, testing and evaluation of conformity'.
BS EN 13598-1	'Plastics piping systems for non-pressure underground drainage and sewerage. Unplasticized poly (vinyl chloride) (PVC-U), polypropylene (PP) and polyethylene (PE). Specifications for ancillary fittings including shallow inspection chambers'.

5.3.13 Excavation

Excavations shall ensure that the invert levels and gradients required by the design are achieved. Issues to be taken into account include:

a) setting out dimensions
b) depth of trenches
c) width of trenches.

Setting out dimensions

When setting out:

- discrepancies in dimensions, and ground conditions which require design modification, should be reported to the designer
- drain runs and depths should be set out from benchmarks previously checked and verified
- resulting variations should be recorded and distributed to all concerned.

Depth of trenches

Excavate to the depths specified in the design.

Where any trench is excavated lower than the designed bottom level, it should be refilled to the designed level. Fill material should be:

- granular material, or
- concrete mix GEN1 or ST ½, (not for field drains).

Hard spots should be undercut and removed so that local stress points under pipes are avoided. Soft spots should be filled with suitable well-compacted material.

Width of trenches

Trenches should be as narrow as possible within working limits and allow a minimum 150mm working space on each side of the pipe.

5.3.14 Protection of pipework

Also see: Chapter 4.3 and 5.1

Drainage systems shall have pipework adequately protected against damage. Issues to be taken into account include:

a) pipes passing through substructure walls
b) pipework under finishes
c) movement joints.

Pipes passing through substructure walls

Where drains pass through structural elements; allowance should be made to accommodate movement.

Pipes passing through substructure walls should accommodate movement by:

- a 50mm clearance all round
- a sleeve, with 50mm clearance all round and suitably sealed, or
- bedded pipes, connected on both sides of the wall with flexible joints located a maximum of 150mm from the face of the wall.

Flexible joints should be made in accordance with the pipe manufacturer's recommendations.

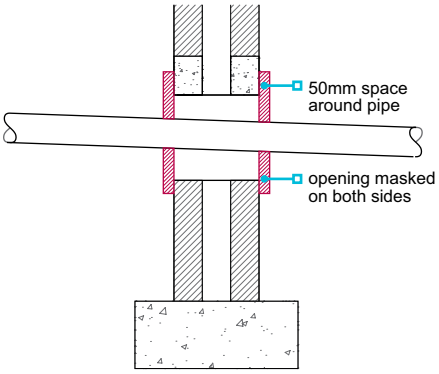

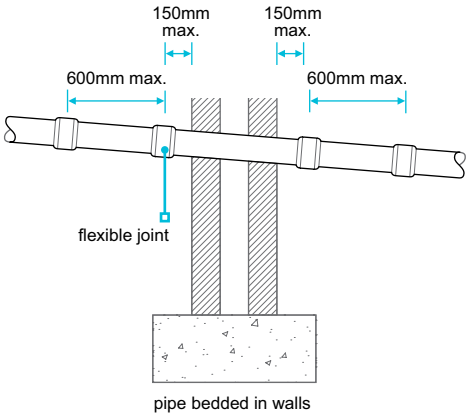

Pipework under finishes

Where drains pass under roads and drives, the final compaction should be sufficient to prevent later settlement.

Rigid pipes less than 1.2m below road surface	Should have: - where necessary, a minimum 100mm concrete encasement - movement joints formed with compressible board at each socket or sleeve joint face - flexible joints which remain flexible.
Flexible pipes less than 0.9m below road surface	Should be protected by: - concrete bridging slabs, or - surrounded with concrete reinforced as appropriate.
Garden areas	Where flexible pipes are not under a road and have less than 600mm cover, where necessary they should have: - concrete paving slabs laid as bridging above the pipes, and - a minimum 75mm of granular material between the top of the pipe and underside of the slabs. 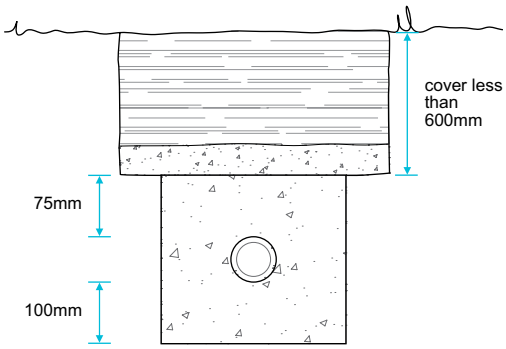

Movement joints

Where rigid pipes are to be encased in concrete, movement joints should be:

- provided around the spigot next to the socket either at 5m maximum intervals or at each joint
- 13mm thick compressible board.

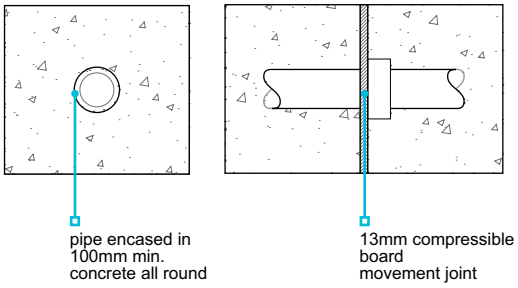

5.3.15 Laying pipework

Pipework shall be laid to the designed lines and gradients. Issues to be taken into account include:

a) bedding

b) sidefill and backfill.

Bedding

Pipes should be firmly supported throughout their length and bedded as specified in the design to resist loads from overlying fill and traffic.

Where pipework is installed under a suspended floor and is supported on ground or fill where movement is likely to occur, additional provisions may be required. See Clause 5.3.8.

Bricks, blocks or other hard material should not be used as temporary supports to achieve the correct gradients, as they may create hard spots which can distort the completed pipe run.

Pipes should be either:

- bedded on granular material, minimum 100mm deep, or
- laid directly on the trench bottom, where the trench bottom can be accurately hand trimmed with a shovel but is not so soft that it puddles when walked on.

For 150mm diameter and 100mm diameter drains, a bed and surround pea gravel in accordance with Table 8 (to a thickness of 100mm all round the drain) will be acceptable for drains under gardens, paths and drives.

Proprietary systems should be assessed in accordance with Technical Requirement R3 and supported in accordance with the manufacturer's recommendations. Some proprietary systems permit a minimum of 50mm depth of bedding in certain circumstances.

Depressions should be formed where necessary in the trench bottom to accommodate pipe joints.

Pipe bedding, including the bedding material, should be in accordance with:

- BS EN 13242
- BS EN 1610
- BS EN 752.

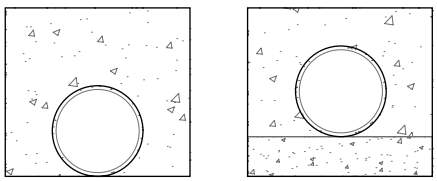

Bedding material and specification should be in accordance with Table 8. Backfill and bedding that includes recycled or secondary materials should conform to the appropriate regulatory requirements for waste, as defined in the Waste Framework Directive 2008.

Table 8: Bedding size

Nominal pipe size	Bedding material complying with BS EN 13242
110mm flexible pipes 100mm rigid pipes	4/10mm pipe bedding gravel
160mm flexible pipes 150mm rigid pipes	2/14mm pipe bedding gravel

Sidefill and backfill

Sidefill and backfill should be placed as soon as the pipes have been bedded, jointed and inspected.

Sidefill should be either granular material or selected backfill material from the trench excavation, free from:

- stones larger than 40mm
- clay lumps larger than 100mm
- timber
- frozen material
- vegetable matter.

Backfill should be well compacted and placed in layers no deeper than 300mm. Mechanical compacting should only be used when compacted backfill is over 450mm above the crown of the pipe.

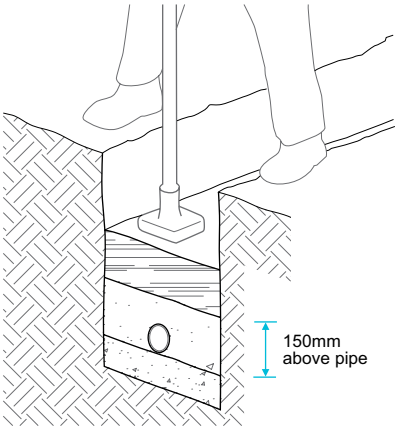

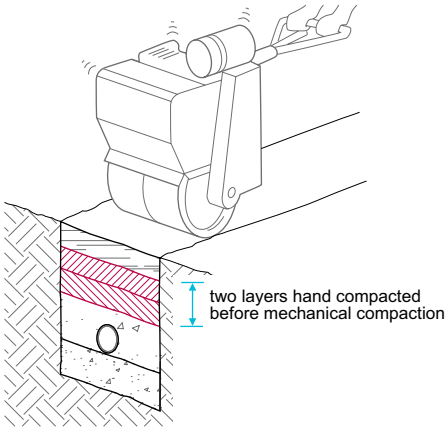

5.3.16 Protection of work

Drainage systems shall be suitably protected from damage by construction work.

Damaged drainage will not be accepted, and it is recommended that:

- no heavy loading or underground work is permitted above, or near, unprotected drainage
- dumpers, trucks, fork lifts or other heavy vehicles are not driven along, or near, pipe runs.

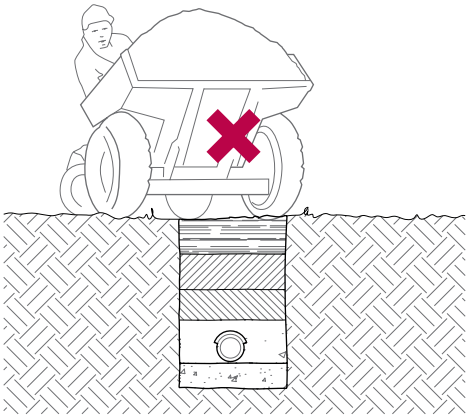

5.3.17 Testing

All foul and surface water drainage systems shall be adequately watertight, and tested where appropriate.

Inspection and testing should be arranged when required by:

- the local authority
- the sewerage undertaker
- NHBC.

Before backfilling, visual inspections are required and the builder is advised to test. When the home is handed over, the system must be in full working order and free from obstruction.

Waterproofing of basements and other below ground structures

CHAPTER 5.4

This chapter gives guidance on meeting the Technical Requirements for the waterproofing of basements and other structures below, or near to, ground level.

5.4.1	Compliance	02
5.4.2	Provision of information	02
5.4.3	Waterproofing	03
5.4.4	Ground conditions	03
5.4.5	Structural stability	04
5.4.6	Design considerations	04
5.4.7	Waterproofing systems	06
5.4.8	Handling, storage and protection	09

NHBC

Raising Standards. Protecting Homeowners

Waterproofing of basements and other below ground structures 2020
CHAPTER 5.4

Introduction

This chapter includes guidance for walls, floors and foundations below, or near to, ground level that are intended to prevent the passage of water from the ground (including from sources such as run-off, burst pipes etc.) entering the building near to or below ground level.

Guidance for the following types of waterproofing systems is included in this chapter:

- **Type A waterproofing barriers**
- **Type B structurally integral construction**
- **Type C drained cavity construction.**

Constructions that are at risk of coming into contact with water and generally require waterproofing include:

- **basements**
- **semi-basements**
- **below ground parking areas**
- **lift pits**
- **cellars**
- **storage or plant rooms**
- **service ducts, or similar, that are connected to the below ground structure**
- **stepped floor slabs where the retained ground is greater than 150mm.**

Types of construction that, depending on the findings of a risk assessment, may require waterproofing include:

- **external walls where the lowest finished floor level is less than 150mm higher than the external ground level**
- **voids caused by split levels.**

Typical examples of construction types:

- - - - - - - - - - - - - - - Waterproofing should be provided where due to the construction details and the ground conditions, there is a risk of contact with ground water (see Table 1)

——————— Waterproofing is required

Basement

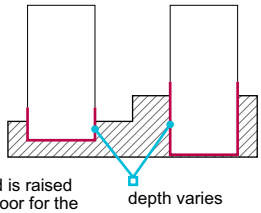

Retained ground and semi-basement

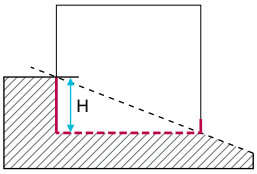

Lift pit

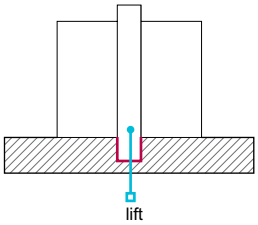

Stairs adjacent to the structure

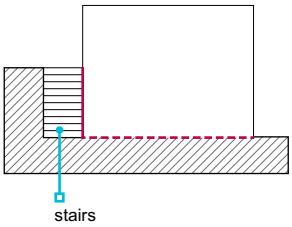

Stepped floor slabs where the retained ground is greater than 150mm

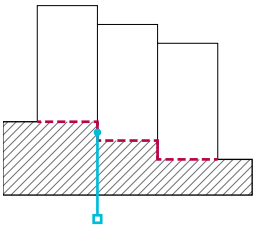

Raised external ground levels

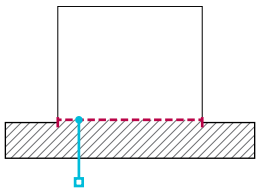

Buried podium

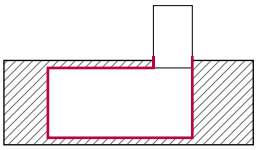

Raised podium

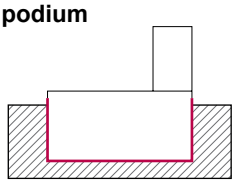

Also see Chapter 7.1 'Flat roof and balconies'.

Retaining walls forming lightwells

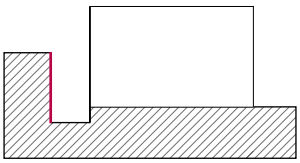

Split levels

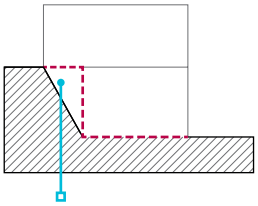

Definitions for this chapter

For the purposes of this chapter the following definitions apply:

Cavity drain membrane	Semi-flexible sheet designed to form a cavity that intercepts water penetrating the structure and directs it to a suitable drainage point. See Type C drained cavity construction.
Combined system	For the purposes of this chapter, a combined system includes: ■ Type A and Type B ■ Type A and Type C ■ Type B and Type C.
Ground barrier	A barrier used to resist the ingress of moisture and or ground gases into the building.
Lowest finished floor level	The top surface of the lowest finished floor, including lift pit floors, car park surfaces and other similar surfaces. Excluding coverings such as carpet and tiles.
Type A waterproofing barrier	A waterproofing barrier applied to the structural element being waterproofed, also known as tanking.
Type A fully bonded barrier	Type A barrier that forms part of a composite structural wall, including liquid applied and cementitious systems. Post-applied sheet membranes are not considered to be fully bonded barriers for the purposes of this chapter.
Type A post applied membrane	A sheet membrane applied to the completed structure typically with hot or cold adhesive
Type B structurally integral construction	The water-resistant properties of the retaining structure providing waterproofing to the building. This chapter provides specific guidance for the use of Type B concrete systems cast in- situ, with or without waterproofing admixtures. The principles are applicable to other Type B systems listed in BS 8102.
Type C drained cavity construction	Construction that incorporates a cavity, generally formed with a cavity drain membrane. Water is removed from the cavity via a managed drainage system.
Waterproofing design specialist	A suitably qualified person co-ordinating the team involved in the design of waterproofing to basements and other below ground structures.
Waterproofing system	A fully assessed and certified system of compatible materials and components used to provide waterproofing. These are normally considered to be Type A, B or C as defined above.
Retained ground	In this chapter retained ground levels are taken from the top of the retained ground to the lowest finished floor level.

5.4.1 Compliance

Also see: Chapter 2.1, BS 8102 and 'Basements for dwellings; guidance document'

Basements and other below ground structures shall comply with the Technical Requirements.

Waterproofing of basements and other below ground structures, including foundations, walls and floors that complies with the guidance in this chapter will generally be acceptable.

5.4.2 Provision of information

Designs and specifications shall be produced in a clearly understandable format, include all relevant information and be distributed to all appropriate personnel.

Design and specification information should be issued to site supervisors, relevant specialist subcontractors and/or suppliers and include the following information:

- A full set of current drawings.
- Details of joints, junctions and service penetrations.
- The manufacturer's information, including relevant parts of the system design manual.
- An installation method statement detailing the sequence of works.
- A ground condition report.
- Third-party certifications.
- Details of the waterproofing design specialist.

Design and specification information should be provided to NHBC at least eight weeks in advance of the works starting on site, in accordance with NHBC Rules.

5.4.3 Waterproofing

Also see: BS 8102

The design of waterproofing systems shall be undertaken by a suitably qualified person and be appropriate for the specific performance required. Items to be taken into account include:

a) waterproofing design

b) risk-based design

Waterproofing design

Waterproofing systems should be designed by a waterproofing design specialist. Designers who have successfully completed the Certified Surveyor in Structural Waterproofing (CSSW) qualification available from the Property Care Association (PCA) are generally acceptable to NHBC. An alternative demonstration of competence may be acceptable, subject to successful review.

The waterproofing design specialist should be appointed in the early design stages to co-ordinate with other designers, including the engineer, and to ensure satisfactory integration of the waterproofing system.

Risk-based design

Waterproofing should be appropriate to the risk, and generally assume exposure to a full height of water during the design life of the building.

Combined systems should be used where:

- a Grade 3 environment is needed, and
- the wall retains more than 600mm.

Alternatively, where the builder has demonstrated that the water table is permanently below the underside of the lowest floor slab, a Type B structurally integral concrete system is acceptable without further protection from a combined system.

The following Types of waterproofing are acceptable where a Grade 2 environment is needed and more than 600mm of ground is retained:

- Type A fully bonded barrier
- Type B
- Type C
- a combined system.

5.4.4 Ground conditions

Also see: Chapter 4.1

The waterproofing system shall take account of ground conditions.

The ground conditions should be fully considered by the engineer and waterproofing design specialist in the design of the waterproofing system.

NHBC may request investigation and a report of the ground conditions where the below ground waterproofed structure:

- retains more than 600mm of ground, measured from the top of the retained ground to the lowest finished floor level
- comprises more than 15% of the perimeter of an individual building (e.g. terraced homes, apartment blocks and detached garages), measured on plan.

The ground conditions report should take into account appropriate investigations, as described in Table 1.

Table 1: Investigation of ground conditions

Further investigation	Guidance and information
Desk study, including review of: - ground water and flooding issues - flood potential of the site - available ground water data - SuDS impact assessment - flood risk assessment - topography of the site - effects of adjacent surface finishes.	**www.environment-agency.gov.uk/homeandleisure/floods** **www.bgs.ac.uk/research/groundwater/datainfo/levels/home.html** **www.metoffice.gov.uk/climate/uk/stationdata**
Contaminated or aggressive ground and/or ground water conditions.	Testing required where there is the potential for chemically aggressive ground and/or ground water.
Water level change, including potential for flash flooding and waterlogging.	Identifying likely fluctuations and short-term flooding events.
Impact assessment of ground water flow where the construction is likely to have a 'damming' effect.	Interpretative report by a qualified engineer, hydrologist or hydrogeologist to include: - assessment of the direction of ground water flow - damming effects on the ground water regime - damming effect of adjacent structures.

Where it is necessary to establish the water table, a detailed hydrogeological assessment should be undertaken by a suitably qualified engineer, and include:

- long-term water level monitoring over at least one year to capture seasonal fluctuations
- short-term flooding events that typically occur during autumn and spring
- information based on a suitable number of boreholes monitored at intervals of three months or less.

5.4.5 Structural stability

Also see: Chapters 4.1, 4.2 and 5.1

Elements forming a waterproofing structure below ground including: foundations, walls and floors, shall adequately resist movement and be suitable for their intended purpose. Issues to be taken into account include:

a) site conditions
b) structural design
c) durability
d) movement
e) design co-ordination.

Site conditions

Parts of the building constructed below ground level that form the structural elements of usable spaces should be designed by an engineer in accordance with Technical Requirement R5 where they are retaining more than 600mm. Issues that should be taken into account include:

- characteristics of the site
- ground conditions
- hazards.

Structural design

The structure should be designed to take account of all imposed loads and actions, including:

- ground movement
- lateral forces from ground water, retained ground and ground surcharge loads
- buoyancy
- loading from other parts of the building
- temporary loading conditions.

Durability

The structure should be designed to be sufficiently durable against site hazards, including:

- chemicals
- frost action
- cyclical wet-dry conditions.

Movement

Movement within the structure should be limited to the capacity of the waterproofing system's resistance to such movement, ensuring that the designed level of watertightness is achieved. Detailed guidance for the limitation of movement should be provided where appropriate.

Movement joints in below ground waterproofed structures should be avoided. Where it is necessary to provide movement joints, the design should ensure satisfactory in-service performance, including watertightness. Such joints should be accessible for maintenance, and not permanently concealed by other structural elements of the building.

Design co-ordination

Structural design should be co-ordinated with the design of the waterproofing.

5.4.6 Design considerations

Also see: Chapter 5.3

The waterproofing of all elements, including walls, floors and foundations, forming below ground structures shall be suitable for intended use. Issues to be taken into account include:

a) grade of waterproofing protection
b) waterproofing systems, materials and components
c) interface with the above ground structure
d) joints, abutments and service penetrations.

Grade of waterproofing protection

Waterproofing systems should be designed to resist the passage of water and moisture to internal surfaces.

The waterproofing grade should be appropriate for the proposed use of the internal space and the equipment located within.

Table 2: Waterproofing grades

Grade	Description	Generally required for:
Grade 3	No water penetration acceptable and a dry environment provided where maintained by adequate ventilation.	Habitable accommodation.
Grade 2	No water penetration is acceptable although damp areas are tolerated.	Non-habitable areas, such as car parks, storage or plant rooms where the internal finishes are not readily damaged by moisture. (Some water ingress may occur where openings are provided in car parks, e.g. for ventilation. To minimise potential for standing water, refer to Chapter 9.1 'A consistent approach to finishes'. Car parks should be provided with drainage to a suitable outfall).
Grade 1	Some seepage and damp areas are tolerable, dependent on intended use.	Retaining walls typically used to form external lightwells. (Drainage may be required to deal with seepage).

Where there is doubt about potential use, minimum Grade 3 protection should be considered in the waterproofing design.

Waterproofing systems, materials and components

Components forming the waterproofing system should be predefined and assessed to demonstrate suitable performance.

The assessment should specifically consider compatibility where materials and components are intended to be interchangeable between systems.

The design information and documentation should detail waterproofing systems, materials and components in accordance with the manufacturer's recommendations.

Proprietary waterproofing systems, materials and components should be assessed in accordance with Technical Requirement R3.

Interface with the above ground structure

Waterproofing should extend at least 150mm above the external ground level and connect with the superstructure damp-proofing. This can generally be achieved by linking the below ground waterproofing system to a continuous cavity tray.

The connection between the below and above ground waterproofing should be bonded and formed with appropriate materials.

Where the waterproofing is linked to the above ground structure via a cavity tray, the materials should:

- compress to form a watertight seal
- be capable of taking the load.

Bitumen-based materials in accordance with BS 6398 or suitable materials assessed in accordance with Technical Requirement R3 should be used.

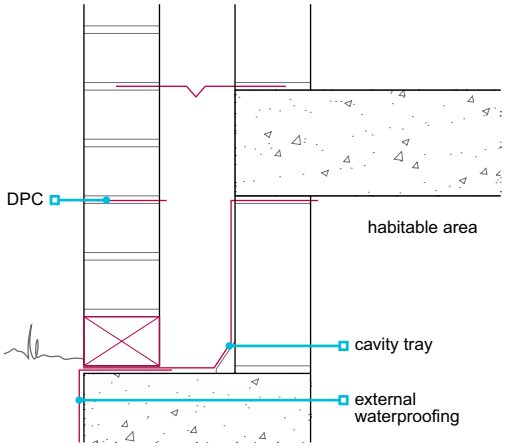

Joints, abutments and service penetrations

The design of waterproofing systems should include the correct method and detailing to form joints, abutments and service penetrations, including those between:

- the waterproofing system and superstructure damp proofing
- horizontal and vertical waterproofing
- system components.

The manufacturer should confirm compatibility between different materials where they are used to form joints.

Details of how junctions and abutments are formed should be provided to site personnel. Proprietary components that are part of, or compatible with, the waterproofing system should be used for complex joints, abutments and service penetrations.

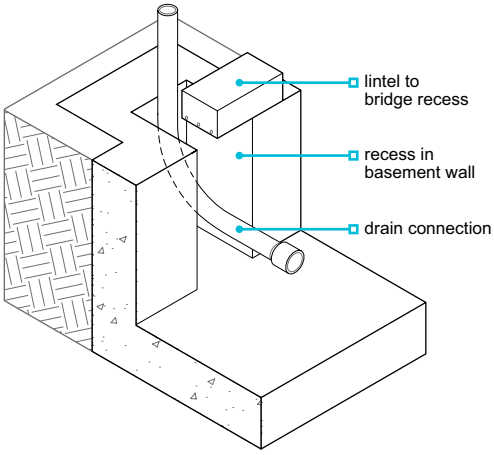

Penetrations through the waterproofing should be avoided where possible. Where penetrations cannot be avoided, the design should detail the method of waterproofing to ensure that it is watertight and durable.

Penetrations, including those for wall ties, services and drainage systems, should:

- be suitably separated to allow for proprietary seals to be correctly installed
- account for differential settlement and movement between the structure/finishes and services.

5.4.7 Waterproofing systems

Also see: Chapters 3.1, 3.2, BS 8102 and 'Concrete basements. Guidance on the design and construction of in-situ concrete basement structures'

The waterproofing shall be suitable for intended use and installed in accordance with the design. Items to be taken into account include:

a) Type A waterproofing barriers
b) Type B structure, integral
c) Type C drained cavity
d) ancillary components.

Appropriate sequencing of work will enable logical and timely construction of the waterproofing system and prevent unnecessary damage to completed elements of work. Installation should be undertaken in accordance with the design and the installation method statement detailing the sequence of works.

Type A waterproofing barrier

Type A systems generally accepted by NHBC when assessed in accordance with Technical Requirement R3 include:

- Post applied membrane (hot or cold adhesive)
- liquid-applied membranes
- geosynthetic (bentonite) clay liners
- mastic asphalt to BS 6925 or BS EN 12970
- cementitious systems
- pre-applied fully bonded systems
- proprietary systems or products assessed in accordance with Technical Requirement R3.

Plain polyethylene sheet should not be used as a waterproofing system.

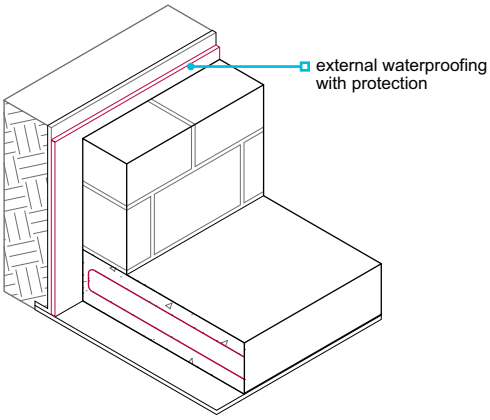

Only fully bonded systems assessed in accordance with Technical Requirement R3 for the specific purpose should be used internally or in sandwich constructions.

Design at junctions and corners should account for proprietary components and be in accordance with the manufacturer's recommendations. Waterproofing barriers should return at corners to prevent water tracking behind.

The substrate to which the Type A system is to be applied should be clean, free from debris and prepared in accordance with the manufacturer's recommendations. Bonded sheet membranes should only be applied directly to masonry substrates that are smooth and have flush pointed joints.

Type A waterproofing should be installed in accordance with the manufacturer's instructions by operatives:

- who are suitably qualified or have been trained by the manufacturer or supplier, and
- who are fully aware of the design and the manufacturer's recommendations for installation.

Completed waterproofing should be protected by:

- protection board, or
- carefully placed backfill material.

The manufacturer's recommendations for climatic conditions at the time of installation should be followed.

Type B structure, integral construction, concrete and application

Structural design should be undertaken by an engineer in accordance with Technical Requirement R5. The design of in-situ Type B concrete systems should be in accordance with:

- BS EN 1992-1-1
- BS EN 1992-3
- Chapter 3.1 'Concrete and its reinforcement'.

Type B systems acceptable to NHBC include:

- in-situ concrete with or without admixtures and crack widths limited by design
- in-situ high-strength concrete with crack widths limited by design and post-construction crack injections
- precast concrete systems assessed in accordance with Technical Requirement R3.

Specialist advice should be sought where other Type B systems are specified. BS 8102 contains guidance for the use of Type B systems, including secant, contiguous and sheet piles.

Ready-mixed concrete should be of sufficient strength and durability, and from a supplier operating under a quality control system acceptable to NHBC such as:

- the Quality Scheme for Ready-Mixed Concrete (QSRMC), or
- the BSI Kitemark scheme.

Other suppliers may be accepted if they operate to a standard acceptable to NHBC.

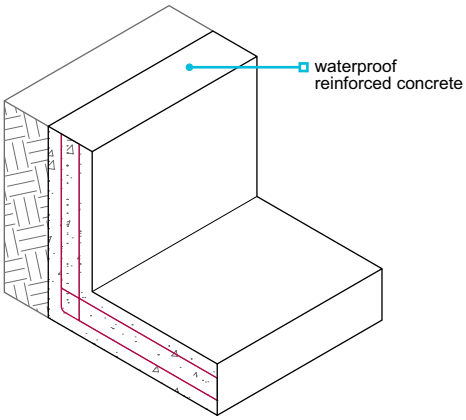

The concrete mix should be agreed between the engineer and the waterproofing design specialist, and:

- achieve the necessary robustness, durability and waterproofing
- be suitable for the environmental exposure and ground conditions.

Type B waterproofing should be installed:

- by suitably qualified operatives who are fully aware of the requirements for placing concrete and reinforcement and for installing ancillary components used in Type B systems
- in accordance with the design.

The line, level and position of formwork and reinforcement should be checked prior to concrete placement to ensure that it is in accordance with the design.

Penetrations from tie bars etc. should be made good in accordance with the design.

Where joints are formed in concrete, surfaces should be clean and free of excessive laitance. Hydrophilic strips should be protected from water before the joint is formed.

Quality management systems and quality audits should be used to record and monitor the placement of concrete on site. Monitoring records should be supplied to NHBC as requested.

Design details for reinforced concrete structures should include:

- Concrete specification.
- The type of concrete.
- Concrete strength.
- Proportion of any admixture.
- Proposals for limiting crack widths.
- Consideration of temporary support to the formwork.
- Type and position of reinforcement.
- The method of making good holes in the concrete formed for shutter bolts and tie bars.
- Positioning of structural elements.
- Appropriate tolerances for the line and level of structural elements.

Joints between components, including day work joints, should be durable and made watertight with appropriate waterstops or hydrophilic strips. Kickers, generally cast as part of the slab, should be used to form the joint between floors and walls.

Concrete with admixtures

Where the design of in-situ concrete waterproofing includes admixtures:

- the ratio of admixture to concrete specified in the design should take account of the recommendations of the admixture supplier
- the reinforcement should be used to control crack widths, which should be in accordance with the design, but not be greater than 0.3mm max. for flexural cracks and 0.2mm max. for cracks that pass through the section
- suitable quality management systems and quality audits should be used to record and monitor the batching of admixture.

Admixtures should be:

- independently assessed, in accordance with Technical Requirement R3
- assessed according to the intended use
- used strictly in accordance with the manufacturer's recommendations.

Concrete without admixtures

Where the design of in-situ concrete waterproofing does not include admixtures:

- high-strength concrete may be specified in order to achieve the necessary level of waterproofing, but post-construction crack injection may be required in order to deal with cracking induced by increased thermal and shrinkage strains
- the reinforcement should be used to control crack widths, which should be in accordance with the design, but not be greater than 0.2mm max. for both flexural cracks and for cracks that pass through the section
- a minimum section thickness of 250mm should be used in the design.

Type C drained cavity construction

Type C systems that include a cavity drain membrane which forms a waterproof barrier are acceptable to NHBC when assessed in accordance with Technical Requirement R3. Where a Type C system is formed using a drained masonry cavity wall, the guidance in BS 8102 should be considered.

Type C systems should be designed to include a drainage system that adequately disposes of water to a suitable outlet, either by gravity or through a sump and pump. The drainage channel, sump and pump should include appropriately located access points for servicing and maintenance. To prevent backflow, the drainage system should be fitted with a one-way valve.

Type C waterproofing should be installed in accordance with the manufacturer's instructions by operatives:

- who are suitably qualified or have been trained by the manufacturer or supplier
- who are fully aware of the design and the manufacturer's recommendations for installation
- using the fixings recommended by the manufacturer.

Pump systems should operate automatically and include:

- a primary pump
- a secondary pump with battery or generator backup
- a suitable audio or visual alarm that indicates pump failure.

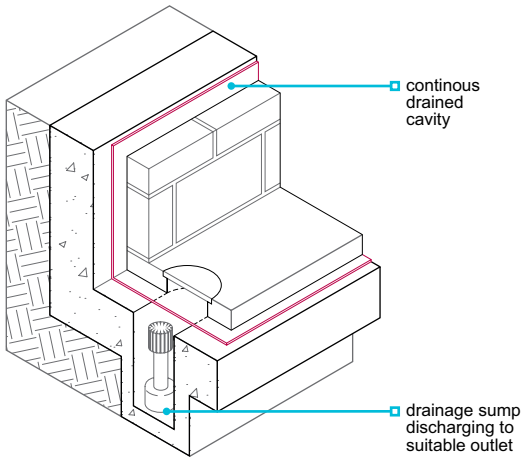

Ancillary components

Ancillary components should be assessed as part of the waterproofing system. Alternatively, an assessment of compatibility and satisfactory performance should be provided for materials and products that are interchangeable between different systems.

Ancillary components include:

- preformed junctions and corners
- reinforcement
- waterstops
- hydrophilic strips.

5.4.8 Handling, storage and protection

Waterproofing materials, products and systems shall be handled, stored and protected in a satisfactory manner to prevent damage, distortion, weathering or degradation. Issues to be taken into account include:

a) handling and storage

b) protection from ongoing works.

Handling and storage

Materials, products and systems should be transported, lifted, handled and stored in accordance with the manufacturer's recommendations.

Protection from ongoing works

Design should consider the risk of damage caused by ongoing works. Details of suitable protection measures should be specified in the design and include:

- fixing of other components, such as skirtings, wall ties and wall linings
- protection of the waterproofing from backfilling.

Proprietary products and systems should be protected and tested before backfilling occurs.

External masonry walls

CHAPTER 6.1

This chapter gives guidance on meeting the Technical Requirements for external masonry walls.

6.1.1	Compliance	01
6.1.2	Provision of information	01
6.1.3	Structural design	01
6.1.4	Fire resistance	03
6.1.5	Acoustic resistance	03
6.1.6	Exposure	03
6.1.7	Thermal insulation	06
6.1.8	Concrete blocks	09
6.1.9	Bricks	09
6.1.10	Stone masonry	10
6.1.11	Construction of masonry walls	11
6.1.12	Lintels	14
6.1.13	Materials suitable for mortar	15
6.1.14	Mortar	15
6.1.15	Render	17
6.1.16	Cladding	17
6.1.17	DPCs and cavity trays	18
6.1.18	Wall ties	22
6.1.19	Handling materials	23
6.1.20	Cold weather working	23

NHBC

Raising Standards. Protecting Homeowners

6.1.1 Compliance

Also see: Chapter 2.1

External walls shall comply with the Technical Requirements.

External masonry walls that comply with the guidance in this chapter will generally be acceptable.

6.1.2 Provision of information

Designs and specifications shall be produced in a clearly understandable format, include all relevant information and be distributed to the appropriate personnel.

Designs and specifications should be issued to site supervisors, relevant specialist subcontractors and suppliers, and include the following information:

- Construction materials.
- Wall layout with all dimensions shown.
- Position and size of openings.
- Wall layouts and elevations with dimensions shown.
- Coursing of bricks and blocks in relation to storey heights and opening positions.
- All junctions, indicating position of DPCs and cavity trays (isometric sketches are recommended for complicated junctions).
- Position and type of lintels.
- Position of restraint straps.
- Cavity closers.
- Reveals.
- How support is given to other elements, e.g. padstones and wall plates.
- Movement joints.
- Acceptable methods of pointing or mortar joint finish.
- Type of insulant to be used.
- Type, spacing and location of wall ties.

Where proprietary products are to be used, manufacturers generally have specific requirements for fixing and/or assembly. This information should also be made available for reference on site so that work can be carried out satisfactorily in accordance with the design and specification.

6.1.3 Structural design

External masonry shall be designed to support and transfer loads to foundations safely and without undue movement. Issues to be taken into account include:

a) compliance with relevant standards
b) lateral restraint
c) point loads
d) bonding
e) movement joints.

Compliance with relevant standards

Design of masonry walls should comply with relevant standards:

Structural design	BS EN 1996-1-1 'Eurocode 6. Design of masonry structures. General rules for reinforced and unreinforced masonry structures'.
Intermediate floors, roofs and walls designed to provide lateral restraint to external walls	BS 8103 'Structural design of low-rise buildings'.
Ancillary components	BS EN 845 (all parts) 'Specification for ancillary components for masonry'.
Walls of homes, or buildings containing homes, over three storeys high	Designed by an engineer in accordance with Technical Requirement R5.

Lateral restraint

Lateral restraint provided by concrete floors:
Concrete floors, with a minimum bearing of 90mm onto the wall, can provide adequate restraint. Concrete floors running parallel to, and not built into, walls require restraint straps to provide restraint to the wall.

Lateral restraint provided by timber floors:
Timber joisted floors can provide adequate restraint when joists are carried by ordinary hangers to BS EN 845-1, and connected to the wall with restraint straps. In buildings up to two storeys, timber joisted floors can provide adequate restraint without strapping when:

- the minimum bearing onto masonry is 90mm (or 75mm onto a timber wall plate), or
- joists are carried by BS EN 845-1 restraint-type hangers with performance equivalent to a restraint strap spaced at a maximum of 2m centres.

Point loads

Where padstones and spreaders are required, they should be located beneath areas of concentrated loads.

Bonding

Where partition walls abut an external wall constructed of similar materials, fully bonded or tied joints are acceptable. To reduce the risk of cracking, a tied joint is preferable where:

- materials have dissimilar shrinkage or expansion characteristics, e.g. dense concrete and aerated concrete
- there is a connection between a load-bearing wall on foundations and a non load-bearing wall supported on a ground-bearing slab.

Tied joints should be formed using expanded metal, wire wall ties or a proprietary equivalent, spaced at maximum 300mm intervals.

Movement joints

Movement joints should be included in long lengths of walling to reduce unsightly cracking, and detailed so that stability is maintained. Where possible, joints should be hidden in corners, or behind rainwater pipes, and:

- run the full height of the superstructure masonry wall
- continue from those provided in the substructure to the superstructure (movement joints may be needed in the superstructure and not in the substructure, providing suitable allowance is made for relative movement).

Vertical movement joints should be provided in the outer leaf, in accordance with Table 1.

Table 1: Suitable dimensions for movement joints

Material	Joint width (mm)	Normal spacing (m)
Clay brick	16	12 (15 maximum)
Calcium silicate brick	10	7.5 – 9
Lightweight concrete block and brick (autoclaved or using lightweight aggregates)(2)	10	6
Dense concrete block and brick (using dense aggregate)(2)	10	7.5 – 9
Any masonry in a parapet wall	10	Half the above spacings and 1.5 from corners (double frequency)

Notes

1 Manufacturer's guidance for the provision of movement joints and bed joint reinforcement should be considered.

2 Lightweight concrete masonry units are generally made of aggregates that have a gross density not exceeding 1,500 kg/m³. Dense concrete masonry units are generally made of aggregate that have a gross density exceeding 1,500 kg/m³.

The spacing of the first movement joint from a return should not be more than half of the dimension in Table 1.

Movement joints are not generally necessary in the inner leaf of cavity walls, but consideration should be given to providing:

- movement joints in rooms with straight unbroken lengths of wall over 6m
- bed joint reinforcement as an alternative to movement joints in areas of risk, e.g. under window openings.

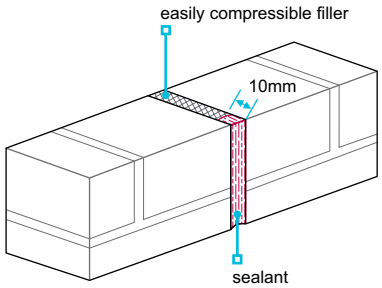

Wall ties should be provided on either side of movement joints, in accordance with Clause 6.1.18.

Where masonry walls form panels in a framed structure, movement joints should be provided in accordance with BS EN 1996-2.

Movement joints should be formed using the correct materials, and account taken of:

- joint width and depth
- anticipated movement and capability of the material
- surface preparation and backing materials
- likely design life of the joint.

Clay bricks expand and require movement joints formed from easily compressible materials, such as:

- flexible cellular polyethylene
- cellular polyurethane
- foam rubber.

The following materials are acceptable for use in contraction joints in concrete brickwork:

- Hemp.
- Fibreboard.
- Cork.

Where movement joints are provided to control shrinkage in concrete blockwork, they may be made as simple vertical joints filled with mortar, and sealed.

Sealant should be a minimum of 10mm deep to ensure a good bond. Where the joint is in a freestanding wall, the filler will require sealant at:

- both exposed edges
- the top, where the joint is carried through any coping.

6.1.4 Fire resistance

External cavity walls shall adequately resist the passage of fire.

Cavities should be closed with cavity closers, in accordance with Building Regulations.

6.1.5 Acoustic resistance

External walls adjacent to separating walls shall be designed to resist flanking sound transmission.

Acceptable levels of sound reduction between homes may be achieved by:

- the inner leaf of an external cavity wall having sufficient density
- sealing air paths
- allowing appropriate spacing between the openings in external walls.

The density of external walls and the position of openings adjacent to separating walls should be in accordance with Building Regulations and, where relevant, an assessment which complies with Technical Requirement R3.

6.1.6 Exposure

Also see: Chapter 6.7

External walls shall be suitable for their exposure and resist the passage of moisture to the inside of the home. Issues to be taken into account include:

a) durability
b) rain penetration
c) frost attack.

Durability

Masonry can become saturated, and may remain so for long periods. Therefore, precautions should be taken to resist frost damage and sulfate attack affecting:

- parapet walls and copings
- sills and projections
- masonry below the DPC at ground level
- freestanding walls.

Bricks and mortar should comply with BS EN 1996-1-1 and the manufacturer's recommendations. In addition, the following mortar mixes can be used with ordinary Portland cement or sulfate-resisting cement:

- Air-entrained 1:1:5½ cement:lime:sand
- Air-entrained 1:½:4½ cement:lime:sand.

Sulfate-resisting cement should be used where S1 clay bricks are used in the following situations:

- Below the DPC where there are sulfates present in the ground.
- Below the DPC where there is a high risk of saturation.
- Retaining walls.
- Parapets.
- Freestanding walls.
- Rendered walls.
- Areas of severe, or very severe, exposure to driving rain.

Reclaimed bricks should only be used where in accordance with Technical Requirement R3.

Rain penetration

In prolonged periods of driving rain, water will penetrate the outer leaf of a masonry wall. The following should be taken into account:

- Site-specific exposure to wind-driven rain.
- Suitability of the wall construction and insulation method.
- Design detailing for the local exposure, and the likely quality of workmanship on site.

Exposed parts of the building should be given particular attention when selecting a suitable construction method, as this may affect the choice for the whole building.

Complete resistance can only be achieved with an impervious cladding. However, the following approaches can reduce the risk of rain penetration:

- Providing cladding to the wall.
- Increasing the clear cavity width (minimum 50mm) or the width of full-fill cavity insulation (increasing the cavity width for full-fill cavity insulation greatly reduces the risk of rain passing through the cavity).
- Rendering the wall and specifying crack-resistant backing material.
- Designing protective features to keep the wall dry, e.g. projecting sills and deep overhanging eaves and verges.
- Ensuring mortar joints are fully filled. Where full cavity insulation is proposed, recessed joints should not be used.
- Following the recommendations of any assessment of the insulation and the manufacturer's recommendations.
- Ensuring that cavities are not bridged.

Cavities should be continuous around enclosed porches and habitable areas.

Insulation should be in accordance with Clause 6.1.7 and Table 2. In Scotland, the cavity should not contain full-fill insulation. In Northern Ireland and the Isle of Man, it is not permissible to fill cavities with pumped thermal insulants at the time of construction.

In Scotland, Northern Ireland, the Isle of Man and in other places where the exposure to driving rain is very severe, masonry should form a rebate at the reveals of openings to avoid a straight through joint where the frame abuts the masonry, or a proprietary cavity closer assessed in accordance with Technical Requirement R3 should be used.

Sills, copings and similar features should be weathered and throated unless adequate alternative provision is made to protect the brickwork from saturation, frost damage and staining.

Variations to the exposure shown on the map can only be made by site-specific calculations using BS 8104 'Code of practice for assessing exposure of walls to wind-driven rain'.

Adapted from BRE report 'Thermal Insulation: avoiding risks'.

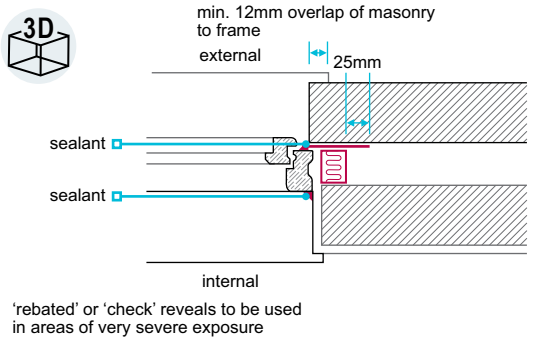

Figure 1: Exposure zones

Exposure zones	Exposure to wind-driven rain (litres/m² per spell)
Very severe	100 or more
Severe	56.5 to less than 100
Moderate	33 to less than 56.5
Sheltered	Less than 33

Frost attack

Common factors which affect the level of frost attack include:

- degree of exposure (incidence of frost)
- saturation of the masonry
- frost resistance of the masonry
- localised protection of the masonry by roof overhangs, trees and other buildings.

Good detailing can limit persistent wetting and reduce the risk of frost attack:

- Paths should drain away from walls to avoid saturating bricks near the ground.
- Sills, copings and similar features should have a weathered upper surface.
- A coping or capping should be provided for all parapet walls, chimneys and freestanding walls, unless clay bricks of F2,S1 or F2,S2 classification to BS EN 771-1 are used.

Copings should have:

- an overhang
- throatings a minimum of 40mm clear of the wall
- a continuous supported DPC which projects beyond the line of the wall.

The following should be taken into account when selecting bricks:

- Manufacturers' recommendations, including the choice and use of mortar and the type of joint finish.
- Bricks that are not frost-resistant (F0,S2 or F0,S1 to BS EN 771) may not be acceptable for use externally, unless completely protected by a cladding which can adequately resist the passage of water.
- Where there is a risk that brickwork may be persistently wet, bricks should be specified that are low in soluble salts.
- Painted or decorated finishes can trap moisture in external brickwork and increase the risk of frost damage, sulfate attack or other detrimental effects. They should not be applied to S1 designation bricks without written agreement from the brick manufacturer.
- In Scotland, all clay bricks used as facings should be frost-resistant, F2,S2 or F2,S1 to BS EN 771-1.

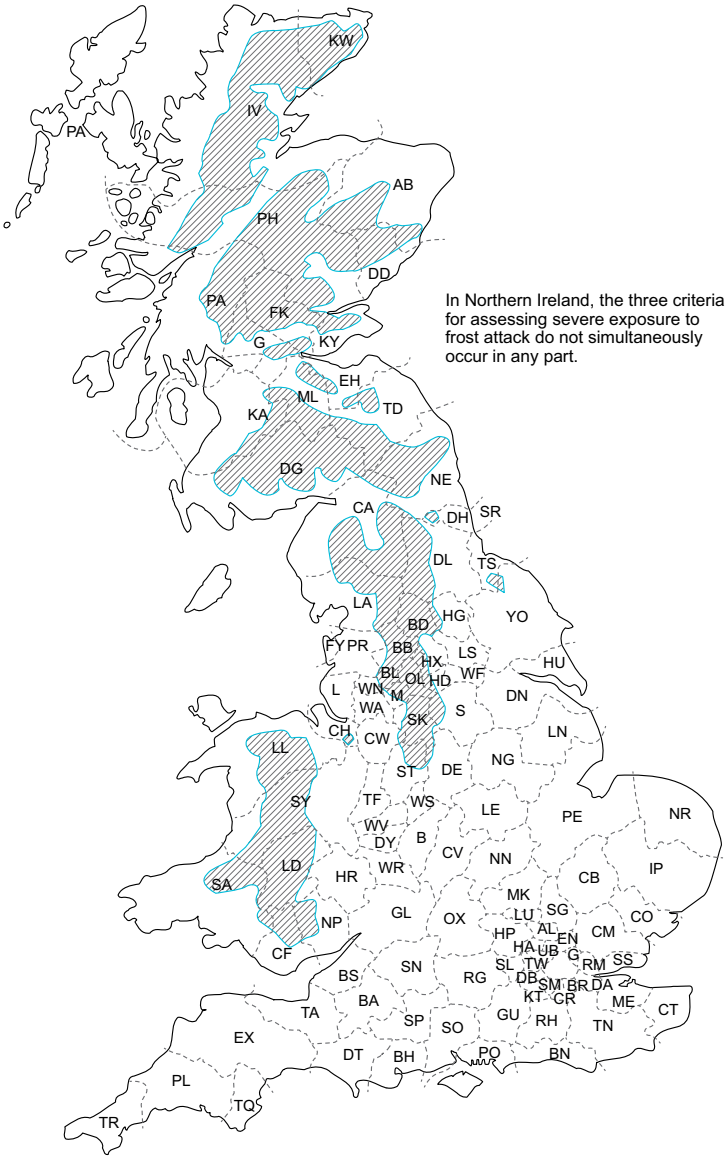

In Northern Ireland, the three criteria for assessing severe exposure to frost attack do not simultaneously occur in any part.

Severe exposure to frost attack

The hatched areas on the map opposite have a frost over 60 days in a year, annual rainfall over 1m and are 90m above sea level. They are therefore are considered to be at severe exposure to frost.

In areas of severe exposure to frost, the following types of brick are acceptable:

- Clay facing bricks which are frost-resistant F2,S2 or F2,S1 to BS EN 771-1.
- Clay bricks which are classified in the manufacturer's published recommendations as satisfactory for the exposure.
- Calcium silicate bricks of at least compressive strength Class 30 and declared as freeze/thaw resistant to BS EN 771.
- Concrete bricks with a minimum strength of 20N/mm^2.
- Concrete blocks with a minimum density of 1,500kg/m^3 or compressive strength greater than 7.3N/mm^2.
- Most types of aerated concrete blocks with render.

Exceptionally severe frost exposure

These are locations which face long stretches of open countryside and are within an area of severe frost exposure, where only frost-resistant bricks F2,S2 or F2,S1 to BS EN 771 are acceptable for the superstructure.

Where there is doubt about the suitability of a facing brick for sites in areas of exceptionally severe frost exposure, written confirmation should be obtained from the brick manufacturer that the brick is suitable for the geographical location, and location in the structure.

Postcode areas at risk of severe exposure to frost attack

The following list identifies the postal areas within which the three criteria for severe exposure to frost attack are met.

AA	3	5																				
BB	1	2	3	4	5	6	7	8	9	10	11	12										
BD	13	15	20	21	22	23	24															
BL	0	1	2	7	8	9																
CA	5	6	7	8	9	10	11	12	13	16	17	19	20	22	23							
CF	8	37	39	40	41	42	43	44	45	46	47	48										
CH	7																					
DD	8	9																				
DE	4	6																				
DG	1	2	3	4	6	7	8	10	11	12	13	14										
DH	8																					
DL	8	11	12	13																		
EH	14	23	26	27	28	43	44	45	46	47	48	55										
FK	1	8	11	12	13	14	15	16	17	18	19	20	21	47								
G	62	63	64	65	72	74	75	76	77	81	82	83	84									
HD	3	4	7	8																		
HG	3																					
HR	2	3	5																			
HX	2	4	6	7																		
IV	1	3	4	6	7	12	13	14	15	16	17	18	19	22	23	24	25	26	27	28	40	54
KA	1	3	4	5	6	16	17	18	19	26												
KW	3	5	6	7	8	9	10	11	12	13	14											
KY	13																					
LA	2	6	8	9	10	12	20	21	22	23												
LD	1	2	3	4	5	6	7	8														
LL	11	15	16	20	21	22	23	24	25	26	27	28	32	33	40	41	54	55	57			
M	24																					
ML	1	2	3	6	7	8	9	10	11	12												
NE	19	46	47	48	49	66	71															
NP	1	2	3	4	5	6	7	8	44													
OL	1	2	3	4	5	6	7	8	9	10	11	12	13	14	15	16						
PA	23	24	25	26	27	32	33	34	35	36	37	38	40	41								
PH	1	2	3	4	5	6	7	8	9	10	11	15	16	17	18	19	20	21				
PH	22	23	25	26	30	31	32	33	34	35	36	37	38	39	40	41						
S	6	10	11	30																		
SA	9	10	11	13	19	20	32	33	39	40	44	48										
SK	6	10	11	12	13	14	15	16	17													
ST	10	13																				
SY	10	16	17	18	19	20	21	22	23	24	25											
TD	1	2	5	8	11	71																
TS	9																					
YO	6	18	21	22																		

Notes
1 Reproduced by permission of the London Brick Company Ltd.
2 Shaded boxes indicate areas which are wholly within areas of severe frost exposure. Other areas are partly within.

6.1.7 Thermal insulation

Thermal insulation shall be adequate and installed correctly. Issues to be taken into account include:

a) installation
b) insulation materials
c) construction type.

The insulation value of the wall must meet the requirements of the relevant Building Regulations. Cold bridging should be avoided. Particular care is needed:

- at openings
- between external walls and roofs, internal walls and floors.

Installation

Workmanship should be maintained to minimise the risk of damp penetration to the inside of the home. Gaps provide routes for dampness, and condensation can form on the cold spots where insulation is missing. Insulation should be:

- close butted with no gaps
- installed in accordance with the manufacturer's recommendations.

Where cavity insulation is used:

- mortar joints, including perpends, should be solidly filled with mortar
- mortar droppings should be removed from wall ties and the edges of insulation materials
- excess mortar should be struck smooth from the inside of the outer leaf.

The first row of insulation boards or batts should be supported on wall ties:

- with a minimum of two ties to each board or batt
- which coincide with horizontal joints in the insulation.

Where wall ties need to be closely spaced, e.g. at reveals, it is acceptable to make a neat cut in the insulation to accept the extra ties.

Insulation boards for partial fill should:

- be stored flat without bearers, otherwise they may distort, making them difficult to fix against the wall
- be rejected where warped.

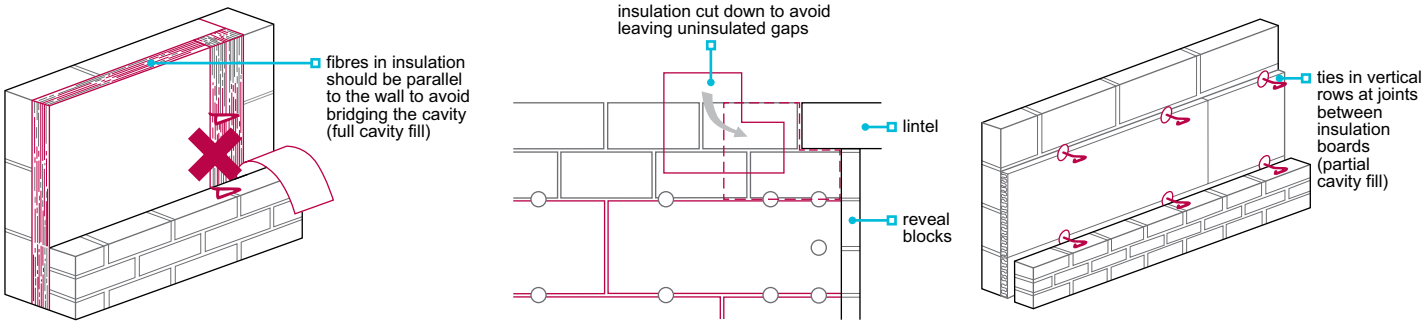

All retro-fill insulation materials, including UF foam, blown mineral fibre and expanded polystyrene beads should be:

- installed by a member of a surveillance scheme acceptable to NHBC
- installed by operatives trained by the assessment holder, and approved by the assessment holder and the assessing organisation.

Insulation materials

Insulation should be:

- UF foam to BS 5617 and installed in accordance with BS 5618, or
- assessed in accordance with Technical Requirement R3.

Construction type

The following are recommendations and guidance according to construction type:

Partial cavity insulation

Where partial cavity insulation is installed:

- it should only be fixed against the cavity face of the inner leaf
- a 50mm clear cavity between the partial cavity insulation and the outer leaf should be maintained
- wall ties long enough to allow a 50mm embedment in each masonry leaf should be used.

In areas of very severe exposure in England and Wales, a residual cavity of 75mm is required where the outer leaf is fairfaced masonry.

Full cavity insulation

Where the cavity is to be fully filled with insulation:

- the type of insulation, its thickness and the wall construction should be suitable for the exposure of the home (see Table 2)
- render on an external leaf of clay bricks (F2,S1 or F1,S1 designation bricks to BS EN 771) is not permitted in areas of severe or very severe exposure to wind-driven rain
- mortar joints should not be recessed
- painted finishes on bricks or render are not acceptable where they are likely to cause damage (including frost damage or sulfate attack).

Table 2: Suitable wall constructions for use with full-fill cavity insulation

Exposure category	Suitable wall construction	Minimum insulation thickness (mm)		
		Built-in insulation	Retro-fill (other than UF foam)	UF foam
Very severe	Any wall with impervious cladding	50	50	50
	Fairfaced masonry with impervious cladding to all walls above ground storey	100	100	N/A
	Any wall fully rendered(2)	75	75	N/A
	Fairfaced masonry(1)	N/A	N/A	N/A
Severe	Any wall with impervious cladding or render(2)	50	50	50
	Fairfaced masonry with impervious cladding or render(2) to all walls above ground storey	50	75	50
	Fairfaced masonry	75	75	N/A
Moderate	Any wall with impervious cladding or render	50	50	50
	Fairfaced masonry with impervious cladding or render to all walls above ground storey	50	50	50
	Fairfaced masonry	50	75	75
Sheltered	Any wall with impervious cladding or render	50	50	50
	Fairfaced masonry with impervious cladding or render to all walls above ground storey	50	50	50
	Fairfaced masonry	50	50	50

Notes

1 In very severe exposure locations, fairfaced masonry with full cavity insulation is not permitted.
2 Render on an external leaf of clay bricks (F2,S1 or F1,S1 designation bricks to BS EN 771) in severe or very severe exposures is not permitted where the cavity is to be fully filled with insulation.
3 This table covers walls where the external leaf does not exceed 12m in height.
4 The exposure category of the home is determined by its location on the map showing categories of exposure to wind-driven rain.
5 Fairfaced masonry includes clay, calcium silicate and concrete bricks and blocks and dressed natural stone laid in an appropriate mortar preferably with struck, weathered or bucket handle joints. Cavity walls of random rubble or random natural stone should not be fully filled.
6 Recessed mortar joints should not be used.
7 In Scotland, it is not permissible to fill the full width of the cavity with any thermal insulation at the time of construction.
8 In Northern Ireland and the Isle of Man, it is not permissible to fill the cavity with pumped thermal insulants (for example, UF foam) at the time of construction.

The thickness of materials should be as required in the design, and in accordance with Building Regulations.

Guidance for retro-filling cavities:

Northern Ireland and the Isle of Man	Not permitted to fill cavities with pumped thermal insulants at the time of construction.
Scotland	Not permitted to fill the cavity fully with any thermal insulants at the time of construction.
England and Wales	In accordance with the guidance in this chapter.

Inner leaf of insulated blockwork

Types of blockwork include:

- lightweight aerated concrete
- lightweight aggregate blocks
- voided blocks with insulation infill
- blocks faced with insulation material.

For insulated blockwork:

- manufacturers' recommendations should be followed
- a clear 50mm wide cavity should be maintained
- blocks should be capable of supporting concentrated loads
- the correct type of joist hanger for the type and size of both the block and joist should be used
- long unbroken lengths of blockwork should be avoided
- precautions should be taken to reduce risk of shrinkage cracking
- restrictions on chasing for services when using voided blocks should be noted.

Insulated dry linings

Where an insulated dry lining contains a combustible insulant, to prevent early collapse of the lining in a fire, the plasterboard should be:

- a minimum of 12.5mm thick
- mechanically fixed to the masonry inner leaf.

Dual insulation

Where partial cavity insulation is used in addition to an insulated block inner leaf, the composite construction should be assessed in accordance with Technical Requirement R3.

6.1.8 Concrete blocks

Concrete blocks shall be capable of supporting intended loads, have appropriate thermal resistance and be resistant to the adverse effects of climate. Issues to be taken into account include:

a) intended loads
b) freeze/thaw and sulfate attack
c) thermal resistance.

Intended loads

Blocks should:

- comply with BS EN 771 and be used in accordance with BS EN 1996-2
- not be used where they do not support the required load-bearing capacity of the wall
- be used in accordance with the manufacturer's recommendations.

The maximum load-bearing capacity of the wall should not exceed the manufacturer's recommendations. Other factors may dictate the strength of blocks required in certain circumstances, e.g. sulfate resistance may require blocks of greater strength.

For one and two storey homes, blocks with a minimum compressive strength of 2.9N/mm^2 should be adequate.

For three storey homes or those with storey heights over 2.7m, 7.3N/mm^2 blocks are required for certain parts of the structure, unless structural design shows that strengths lower than 7.3N/mm^2 are adequate.

Freeze/thaw and sulfate attack

Concrete blocks used in the outer leaf without protective cladding or render should:

- have a compressive strength exceeding 7.3N/mm^2
- have a density exceeding 1,500kg/m^3
- be made with dense aggregate to BS EN 12620, or
- be lightweight aerated concrete blocks having had their suitability confirmed by the manufacturer.

Where there are sulfates in the ground, concrete blocks should not be used below the DPC unless suitability is confirmed by the block manufacturer. Where this is permissible, the mortar should be sulfate-resisting with a mix suitable for the level of sulfates in the ground.

Thermal resistance

Concrete blocks may have been specified according to thermal performance and strength. Alternative concrete blocks should not be used without the designer's acceptance.

6.1.9 Bricks

Bricks shall be capable of supporting intended loads and have appropriate resistance to the adverse effects of freeze/thaw and sulfate attack.

The design strength of bricks should comply with:

- BS EN 1996-1
- the design.

Table 3: Classification of clay bricks according to their freeze/thaw resistance and active soluble salt content in accordance with BS EN 771-1

Durability	Freeze/thaw resistance	Active soluble salt content
F2,S2	Freeze-/thaw-resistant (F2), durable in all building situations	(S2) low
F2,S1	Freeze-/thaw-resistant (F2), durable in all building situations	(S1) normal
F1,S2	Moderately freeze-/thaw-resistant (F1), durable except when saturated and subject to repeated freezing and thawing	(S2) low
F1,S1	Moderately freeze-/thaw-resistant (F1), durable except when saturated and subject to repeated freezing and thawing	(S1) normal
F0,S2	Not freeze-/thaw-resistant (F0), liable to be damaged by freezing and thawing	(S2) low
F0,S1	Not freeze-/thaw-resistant (F0), liable to be damaged by freezing and thawing	(S1) normal

Calcium silicate and concrete bricks contain no significant active soluble salts. Information on their durability is given in this chapter.

Clay bricks

Bricks that are freeze-/thaw-resistant (F2,S2 or F2,S1 to BS EN 771) should be used where there is a high risk of prolonged wetting and freezing including:

- external facing work in Scotland
- exposed parts, including copings, sills, parapets and chimneys which have no overhang to provide protection
- areas of the country subject to exceptionally severe freeze/thaw exposure. See Clause 6.1.6.

In areas of severe freeze/thaw exposure outside Scotland, bricks that are moderately freeze-/thaw-resistant (F1,S1 or F1,S2 to BS EN 771) may be used for general wall areas, provided they are classified in the manufacturer's published recommendations as satisfactory for the exposure.

Bricks that are not freeze-/thaw-resistant (F0,S2 or F0,S1 to BS EN 771) are not acceptable for use externally, unless completely protected by a cladding which can satisfactorily resist the passage of water.

Where brickwork may become saturated, moderately freeze-/thaw-resistant bricks (F1,S1 or F1,S2 to BS EN 771) are not appropriate where there is a risk of vulnerability to frost. In saturated conditions, sulfate-resisting cement mortar is required for S1 designation bricks.

For one and two storey homes, clay bricks to BS EN 771, with a minimum compressive strength of 9N/mm^2 should be adequate.

For three storey homes; clay bricks to BS EN 771 with a minimum compressive strength of 13N/mm^2 are acceptable.

Concrete bricks

Concrete bricks have a direct relationship between strength and durability, including freeze/thaw resistance. Most concrete bricks have a strength of 20N/mm^2 and are durable in most situations. For copings and sills, bricks with a compressive strength of 36N/mm^2 should be used.

Calcium silicate bricks

Calcium silicate bricks do not contain significant amounts of soluble sulfates and may be suitable where sulfate-bearing soil and ground water conditions exist. Where calcium silicate bricks are used, it should be in accordance with the manufacturer's recommendations.

Bricks of compressive strength Class 20 (BS EN 771-2) are suitable for most applications.

Bricks of strength Class 30 and declared as freeze-/thaw-resistant to BS EN 771-2 are recommended in the following areas:

- severe freeze/thaw exposure
- where bricks may be persistently wet, e.g. parapets, chimneys, sills and below the DPC.

Reclaimed bricks

Reclaimed bricks:

- should be used in accordance with Technical Requirement R3
- should be considered as F1,S1 or F1,S2 to BS EN 771 and used accordingly
- may require independent certification of suitability
- may be unsuitable for external work because of a high salt content or a lack of freeze/thaw resistance
- which have previously been used internally or which were fully protected may be unsuitable in external situations.

It is advisable to know where reclaimed bricks came from, and if they were used internally or externally.

Special shaped bricks

Special shaped bricks should conform to BS 4729.

6.1.10 Stone masonry

Stone masonry shall be constructed to an acceptable standard, including the performance standards for brick and block where applicable. Walls shall be capable of supporting the intended loads and have appropriate resistance to the adverse effects of freeze/thaw.

Stone masonry should comply with the following:

Stone for masonry	BS EN 771-6 'Specification for masonry units. Natural stone masonry units'.
Cast stone masonry units	BS EN 771-5 'Specification for masonry units. Manufactured stone masonry units'. or BS 1217 'Cast stone. Specification'.
Stone masonry, natural or cast	BS EN 1996 'Design of masonry structures'.

Stone masonry will be acceptable where it:

- provides an adequate weather-resisting structure in conjunction with any brick or block backing, and/or vertical DPMs
- complies with the guidance in this chapter for brickwork/blockwork
- follows good local recognised practice to provide a high standard.

6.1.11 Construction of masonry walls

Also see: Chapter 7.1, 9.1 and PD 6697:2010

Construction shall ensure a satisfactory standard of brickwork and blockwork. Issues to be taken into account include:

a) finished appearance
b) bonding
c) construction
d) openings
e) corbelling
f) chasing for services
g) protection of ancillary components.

Finished appearance

The appearance of a masonry wall depends upon the:

- materials used
- setting out
- workmanship.

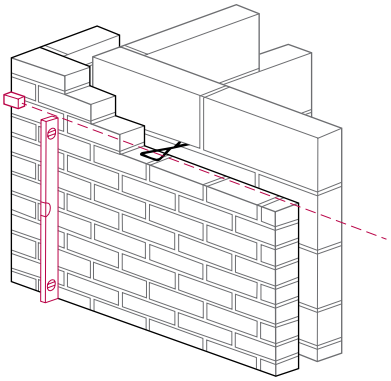

When setting out masonry, avoid:

- cutting bricks or blocks, except when it is essential
- irregular or broken bonds, particularly at openings.

All work should be reasonably level and true, and:

- the bond detailed in the design used
- perpendicular joints kept in line and plumb
- courses kept level by using lines and spirit levels.

To keep courses to the correct height, use a gauge rod marked with the height of windows, doors and floors.

Where a number of openings of similar width are being formed, use a rod cut to the required size to check the width of openings as the work rises.

Brickwork and blockwork should not be subjected to vibration until the mortar has set.

Bonding

A regular bonding pattern should be maintained. External walls should be bonded to partitions and party walls as required by the design. Either:

- tooth every alternate course, or
- tie with wall ties, expanded metal or equivalent at maximum 300mm vertical centres.

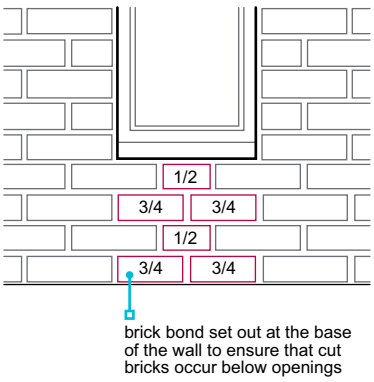

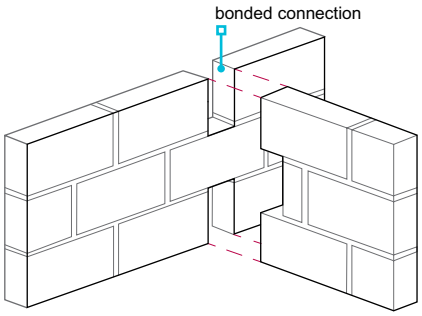

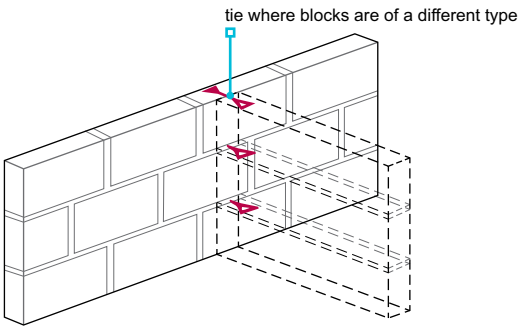

Where joist hangers are not used, joist filling should be brickwork or blockwork and without excessive mortar joints.

Joist filling should be:

- 12mm below the top of flat roof joists to allow for timber shrinkage, and
- checked to ensure the cold roof ventilation is not blocked.

Clay bricks and concrete blocks should not be mixed. Where a different size of masonry unit is needed to ensure correct coursing, small units of the same material should be used to reduce cracking and problems due to different thermal insulation properties.

Where the inner leaf of a cavity wall is being used for thermal insulation, and where a different size of masonry unit is used to ensure correct coursing, the unit should have similar thermal insulation properties to the masonry used for the rest of the wall.

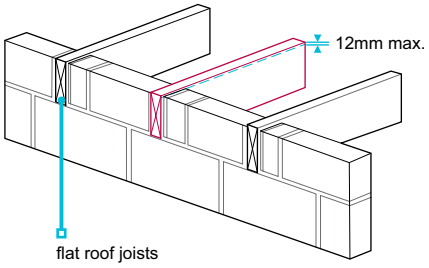

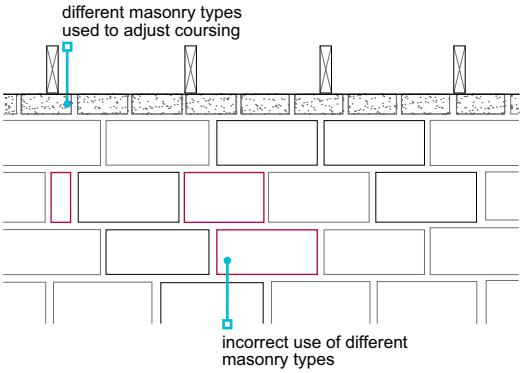

Construction

The difference in heights between the two leaves of a cavity wall under construction can be up to six block courses, provided the ties are sufficiently flexible to ensure coursing is achieved without breaking the bond. To keep the wall plumb, do not over-reach at changes of lift; wait for the next scaffolding lift.

Cavities should be constructed so that:

- they are uniform and in accordance with the design, including wall tie specification and cavity width
- mortar is struck from all joints as work proceeds
- cavity trays and wall ties are clear of droppings and debris
- mortar droppings are removed
- where cavity insulation is used, mortar droppings are removed from the top edge
- where partial cavity insulation is used, it is against the inner leaf of the cavity.

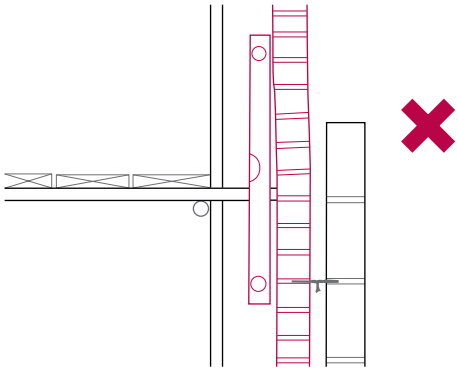

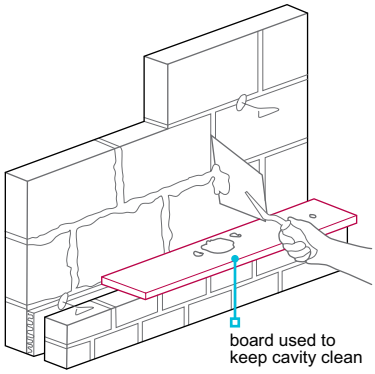

Openings

Masonry may be built around either:

- the frame in-situ, or
- a profile or template to enable the frame to be fitted later.

Openings should be the correct size, square and:

- brickwork should butt closely against the frame
- the frame should not be distorted by forcing bricks against the jamb.

When window and door frames are built-in, they should be fixed with:

- frame cramps
- proprietary cavity closers, or
- plugs and fixings.

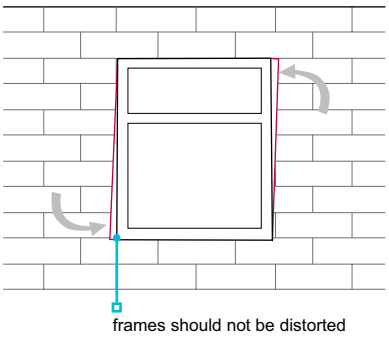

Corbelling

Where reinforcing is used, corbels should be designed by an engineer in accordance with Technical Requirement R5.

Where courses are corbelled outwards in ordinary masonry, one above another; the extent of corbelling should not exceed that shown in the diagrams on the right.

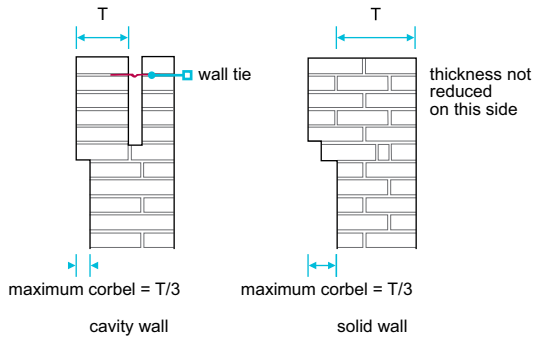

Chasing for services

Chases should:

- not be cut with impact power tools, as they can damage the wall
- not be cut into hollow blocks unless specifically permitted by the manufacturer
- be cut with care
- be limited to 1/6 of the depth of the leaf where horizontal
- be limited to 1/3 of the depth of the leaf where vertical.

Protection of ancillary components

Table 4 contains guidance for a selection of ancillary components for use in buildings up to three storeys in height, in a non-aggressive environment.

Table 4: Protection of ancillary components

Product type	EN 845 ref[1]	Material/coating specification (the zinc coating masses are for one surface)
Wall ties, tension straps and hangers conforming to BS EN 845-1	1	Austenitic stainless steel (molybdenum chrome nickel alloys)
	3	Austenitic stainless steel (chrome nickel alloys)
	8 or 9	Zinc coated (940g/m^2) steel wire or component
Tension straps and hangers conforming to BS EN 845-1 (internal uses[2])	10	Zinc coated (710g/m^2) steel component
	11	Zinc coated (460g/m^2) steel component
	12.1 or 12.2	Zinc coated (300g/m^2) steel strip or sheet with organic coating over all outer surfaces of finished component
	13	Zinc coated (265g/m^2) steel wire
	14	Zinc coated (300g/m^2) steel strip or sheet with all cut edges organic coated
	15	Zinc precoated (300g/m^2) steel strip or sheet
	16.1 or 16.2	Zinc coated (137g/m^2) steel strip or sheet with organic coating over all outer surfaces of finished component
	17	Zinc precoated (137g/m^2) steel strip with zinc coated edges
Lintels conforming to BS EN 845-2	L3	Austenitic stainless steel (chrome and nickel alloys)
	L10	Zinc coated (710g/m^2) steel component
	L11.1 or L11.2	Zinc coated (460g/m^2) steel component with organic coating over all outer surfaces of finished component
	L12.1 or L12.2	Zinc coated (300g/m^2) steel strip or sheet with organic coating over all outer surfaces of finished component
	L16.2	Zinc coated (137g/m^2) steel strip or sheet with organic coating over all outer surfaces of finished component
Lintels conforming to BS EN 845-2, where used with a separate DPC	L11	Zinc coated (460g/m^2) steel component
	L14	Zinc coated (300g/m^2) steel strip or sheet with all cut edges organic coated
	L16.1	Zinc coated (137g/m^2) steel strip or sheet with organic coating over all outer surfaces of finished component
Bed joint reinforcement conforming to BS EN 845-3	R1	Austenitic stainless steel (molybdenum chrome nickel alloys)
	R3	Austenitic stainless steel (chrome nickel alloys)

Notes
1 Material/coating reference in accordance with the relevant part of BS EN 845.
2 These products are not suitable for use in contact with the outer leaf of an external cavity wall or a single leaf cavity wall.

Components in contact with, or embedded in, an inner leaf which is damp or exposed to periodic wetting (e.g. below the DPC) should be protected in the same way as components in contact with, or embedded in, an outer leaf.

6.1.12 Lintels

Also see: Chapter 6.5 and BRE Report 'Thermal insulation: avoiding risks'

Lintels, and supporting beams, shall be installed correctly, safely support the applied loads and be of the type and dimensions appropriate to their position within the structure. Issues to be taken into account include:

a) thermal insulation and condensation
b) durability and resistance to water entering the home
c) placing lintels.

Concrete, steel and reinforced brickwork are acceptable materials for use as lintels. Timber lintels should not be used, unless:

- protected from weather
- they do not support masonry or other rigid or brittle materials.

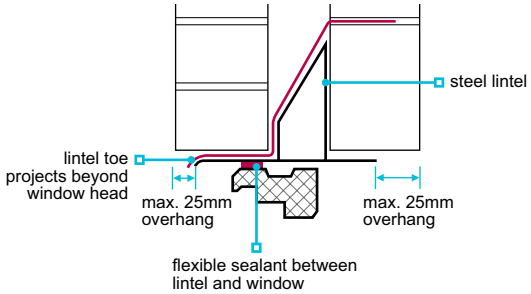

Lintels should:

- comply with BS EN 845-2 'Specification for ancillary components for masonry', where steel or concrete
- be designed in accordance either with Technical Requirement R5 or the manufacturer's recommendations
- be provided where frames are not designed to support superimposed loads
- be wide enough to provide adequate support to the walling above
- not have brickwork or masonry which overhangs more than 25mm
- have cavity trays where they are specified in the design
- have padstones and spreaders provided under the bearings, where necessary
- not have point loads applied before the manufacturer's requirement of fully bedded brickwork is met (this is to avoid overstressing).

Lintels should extend beyond the opening (at each end) by the minimum lengths shown in Table 5.

Table 5: Lintel bearing

	Minimum bearing length (mm)	
Span (m)	Simple lintel	Lintel combined with cavity tray
Up to 1.2	100	150
Over 1.2	150	150

Where steel lintels are used:

- the manufacturer's recommendations for providing adequate fire resistance should be followed, particularly to the lower steel flange
- the inner and outer leaf should be built up together to avoid twisting the lintel flange
- the difference in height between the leaves should not exceed 225mm.

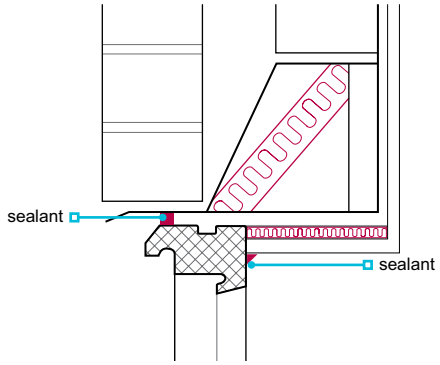

Thermal insulation and condensation

The risk of condensation at potential cold bridges, such as reveals and soffits, increases as the level of wall insulation increases. To avoid cold bridging:

- wall insulation should abut the head of the window frame
- insulation should be provided at the underside of the lintel, unless the manufacturer produces an alternative.

In England and Wales, account should be taken of Accredited Details.

Durability and resistance to water entering the homes

Cavity tray/damp proof protection should be provided:

- over all openings, either combined as part of the lintel or separate
- where the outer leaf is fairfaced masonry or where full-fill insulation is used, all cavity trays (separate or combined) should have stop ends.

Separate cavity tray protection should be provided when corrosion protection to the lintel is inadequate, or the shape of the lintel is unsuitable, such as when:

- the profile of the lintel does not form a cavity tray
- steel lintels in external walls have material/coating in accordance with L11, L14 and L16.1, see Table 4.

In Scotland, Northern Ireland, the Isle of Man and areas of severe or very severe exposure to driving rain, a separate cavity tray should be provided over all lintels.

Lintels should be:

- austenitic stainless steel where used in aggressive environments, e.g. coastal sites
- located and sized so that the external edge of the lintel projects beyond, and therefore offers protection to, the window head.

Placing lintels

The design should be checked and lintels should:

- be an appropriate size for the opening and the end bearings (at each end)
- have padstones where required, e.g. for long spans
- be installed level on a solid bed of mortar (not soft or non-durable packing)
- be set out to ensure that lintels bear on a full block
- not have brickwork or masonry which overhangs more than 25mm.

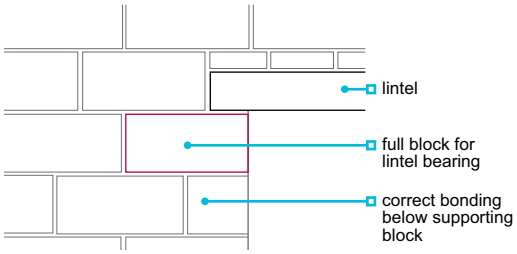

Concrete floor units or other heavy components which bear on lintels should be positioned carefully to avoid damage or shock load.

6.1.13 Materials suitable for mortar

Materials used for mortar should comply with the appropriate requirements and standards.

Relevant standards include:

BS EN 197	'Cement. Composition, specifications and conformity criteria for common cements'.
BS EN 197 or BS EN 413	'Masonry cement'.
BS EN 459	'Building lime'.
BS EN 998	'Specification for mortar for masonry'.
BS EN 934	'Air entraining and set retarding admixtures'.
BS EN 12878	'Pigments for the colouring of building materials based on cement and/or lime. Specifications and methods of test.'.

6.1.14 Mortar

Also see: Chapter 3.2

Mortar shall be of the mix proportions necessary to achieve adequate strength and durability and be suitable for the type of masonry. Issues to be taken into account include:

a) sources of sulfate
b) admixtures and additives
c) preparing mortar
d) joints.

Unless recommended otherwise by the brick manufacturer, the mixes in Table 6 should be used for clay bricks. In the case of concrete or calcium silicate bricks, particular attention should be paid to the manufacturer's recommendations.

Table 6: Mortar mixes using ordinary Portland or sulfate-resisting cements

Location		Recommended cement:lime: sand mix	Recommended cement:sand mix with air entraining plasticiser	Recommended masonry cement: sand mix	Mortar designation to BS EN 1996-1-1
General wall area above the DPC	In areas of severe or very severe exposure – high durability	1:½:4½	1:3½	1:3	(ii)
	Other exposure categories – general use	1:1:5½	1:5½	1:4½	(iii)

Table 6 (continued): Mortar mixes using ordinary Portland or sulfate-resisting cements

Location		Recommended cement:lime: sand mix	Recommended cement:sand mix with air entraining plasticiser	Recommended masonry cement: sand mix	Mortar designation to BS EN 1996-1-1
Below DPC level and in chimney stacks	High durability	1:½:4½	1:3½	1:3	(ii)
Cappings, copings and sills	Low permeability	1:0 to ¼:3	–	–	(i)

Air-entraining plasticiser can be incorporated in the following general use and high durability mortars:

- 1:1:5½, cement:lime:sand, or
- 1:1:4½, cement:lime:sand.

Retarded mortar

Retarded mortar and most premixed mortars can be used over a longer period of time than site-mixed, cement:lime:sand mortars. When using retarded mortar:

- follow manufacturer's recommendations and timescales
- do not use it beyond the time for which it is effective
- protect it against freezing prior to use
- temporary bracing of larger walls, e.g. at gable peaks and long walls, may be necessary due to delayed setting times.

Sources of sulfate

Mortar is vulnerable to deterioration by sulfates, especially when masonry is saturated for long periods of time. Clay bricks contain soluble sulfate (S1 designations have no limit on their sulfate content) and so a suitable mortar should be used.

To reduce risk, sulfate-resisting Portland cement to BS EN 197-1 should be used:

- below the DPC level when sulfates are present in the ground
- when clay bricks (F2,S1 and F1,S1 to BS EN 771) are used
- when there is a high saturation risk (examples below).

High saturation risk situations are:

- below the DPC
- areas of severe or very severe exposure to driving rain
- parapets
- retaining walls
- freestanding walls
- rendered walls
- chimney stacks.

Admixtures and additives

Admixtures should:

- only be used where authorised
- not contain calcium chloride
- be dosed and used in accordance with the manufacturer's recommendations.

Mortars containing an air-entraining plasticiser are more resistant to freeze and thaw damage when set, but do not prevent freezing before the mortar is cured.

White cement to BS EN 197 and pigments to BS EN 12878 may be used, but pigments should not exceed 10% of the cement weight, or 3% where carbon black is used.

Preparing mortar

When preparing mortar:

- ensure the mix is appropriate for the use and location
- plant and banker boards should be kept clean
- mixers should be kept clean to operate efficiently
- the colour should be consistent.

When laying bricks and blocks:

- mortar which has started to set should not be retempered
- they should have a solid mortar bedding and fully filled perpends, to reduce the risk of rain penetration and dampness in the wall.

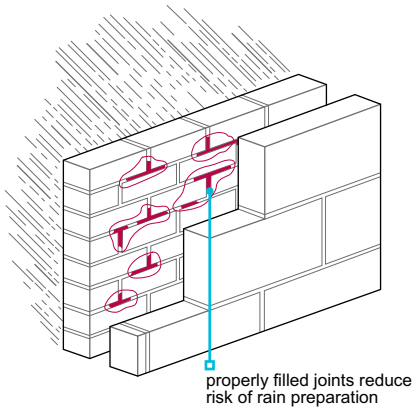

Joints

Jointing is preferable to pointing because it leaves the mortar undisturbed. Struck (or weathered) and bucket handle joints are preferable for external walls. Unless the design states otherwise, only bucket handle or weathered joints should be used.

Recessed joints should not be used where:

- bricks are not frost-resistant, e.g. clay F1,S1 or F1,S2 to BS EN 771, unless the brick manufacturer has confirmed their use for that particular location in writing
- the home is built on steep sloping ground, facing open countryside or within 8km of a coast or large estuary
- bricks are perforated closer than 15mm to the face
- there is no reasonable shelter from driving rain, e.g. from buildings or groups of trees within 50m and of similar height to the home
- the cavity is to be fully filled with cavity insulation.

6.1.15 Render

Also see: Chapter 3.3

The surface to which render is applied, shall be appropriately constructed and satisfactorily resist the passage of moisture.

Walls to be rendered should be constructed in accordance with the relevant parts of this chapter, including provision of damp-proofing in accordance with Clause 6.1.17, and Chapter 6.11 'Render'.

6.1.16 Cladding

Also see: Chapter 3.3 and 6.2

Cladding shall satisfactorily resist the passage of moisture and be of the quality, type and dimensions required by the design. Issues to be taken into account include:

a) masonry cladding to framed structures
b) joints
c) moisture barriers
d) materials for cladding
e) vertical tile or slate cladding
f) stone veneer cladding.

Masonry cladding to framed structures

Allowance should be made for differential movement between cladding and the frame. The following precautions should be taken to prevent buckling and fracturing of masonry panels:

- Flexible movement joints should be provided at the underside of each horizontal support member.
- The masonry outer leaf should have a minimum two-thirds of its width supported securely by the concrete frame or a metal angle.
- Vertical movement joints should be provided at corners.
- The inner leaf should be adequately tied to the structural frame.

Joints

Joints between claddings and adjacent materials should:

- be detailed to be watertight under the particular exposure conditions of the site
- have provision for differential movement, where necessary.

Moisture barriers

Moisture barriers should be:

- provided between walls of solid masonry and any boarding, slating, tiling or other similar claddings (unless specifically not required for a proprietary cladding)
- proprietary materials assessed in accordance with Technical Requirement R3.

Vapour control layers, such as polyethylene sheet, are not an acceptable moisture barrier.

Materials for cladding

Table 8: Materials for cladding

Component	Requirement	Notes
Tiles and slates	BS EN 1304, BS EN 490, BS EN 12326-1	Clay tiles for tile hanging, concrete tiles for tile hanging, slates for vertical slating.
Timber boarding	BS EN 942	Timber should: ■ comply with, and be at least J50 ■ be a naturally durable species or pretreated with preservative.
Battens		Battens should be: ■ of the size specified in the design ■ pretreated with preservative.
Proprietary cladding systems	Technical Requirement R3	

Timber cladding should be in accordance with Chapter 3.3 'Timber preservation (natural solid timber)'.

Vertical tile or slate cladding

Vertical tile or slate cladding should:

- have each tile or slate fixed with two nails
- be fixed using aluminium, copper or silicon bronze nails
- be finished with an under-course and tilting batten at the bottom edges.

Stone veneer cladding systems

Stone veneer cladding systems should be in accordance with:

- BS 8298 when mechanically fixed
- Technical Requirement R3 when adhesive fixed
- Chapter 6.9 when used as a brick slip / rainscreen system.

6.1.17 DPCs and cavity trays

DPCs and related components shall be provided to prevent moisture rising or entering the building. Issues to be taken into account include:

a) provision of DPCs and cavity trays
b) stepped cavity trays
c) parapet details.

Provision of DPCs and cavity trays

DPCs and flexible cavity trays should be of the correct dimensions to suit the detailed design.

At complicated junctions, clear drawings and the design should be provided, and preformed cavity trays used.

The following materials are acceptable for use as DPCs:

- Bitumen to BS 6398.
- Polyethylene to BS 6515 (except below copings and in parapets).
- Proprietary materials assessed in accordance with Technical Requirement R3.

Table 9: Positions where DPCs and cavity trays are generally required

Location	Provision of DPCs and cavity trays
Base of walls, piers, etc.	A DPC should be provided a minimum 150mm above adjoining surfaces and linked with the DPM in solid floors.
Base of partitions built off oversite where there is no integral DPM	The DPC should be the full width of the partition.
Base of wall built off beam, slab, etc.	Detail to prevent entry of damp by driving rain.
Parapets	Beneath coping, and 150mm above adjoining roof surface to link with the roof upstand.
In cavity walls over openings, air bricks, etc.	A cavity tray should be provided to direct any water that enters the cavity to the outside. The cavity tray should fully protect the opening.
At the horizontal abutment of all roofs over enclosed areas and balconies to walls	A cavity tray should be provided 150mm above any adjoining roof or balcony surface. The tray should be lapped over any roof upstand or flashing to ensure water penetrating into the cavity does not enter the enclosed area.
At sloping abutments of all roofs over enclosed areas to cavity walls	Preformed stepped cavity trays should be provided above the roof surface and linked to the roof upstand or flashing to ensure any water penetrating into the cavity does not enter the enclosed area.
Doorsteps	A DPC should be provided behind a doorstep where it is higher than a wall DPC.

Table 9 (continued): Positions where DPCs and cavity trays are generally required

Location	Provision of DPCs and cavity trays
Sills	Where precast concrete or similar sills incorporate joints or are of a permeable material, a DPC should be provided beneath them for the full length and be turned up at the back and the end of the sill.
Jambs in cavity	The reveal should be protected throughout its width by a continuous DPC. The width of the DPC should be sufficient to be fixed to, or overlap, the frame and fully protect the reveal. For very severe exposure conditions, rebated reveal construction or a proprietary closer, suitable for the conditions, should be used.

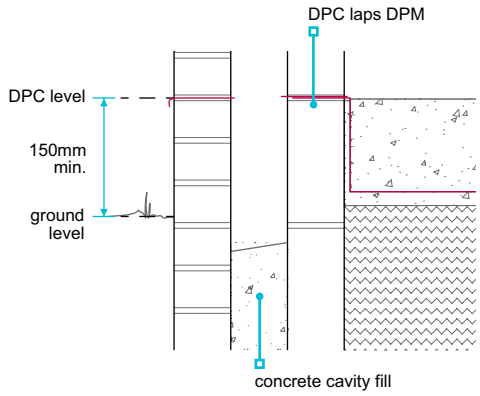

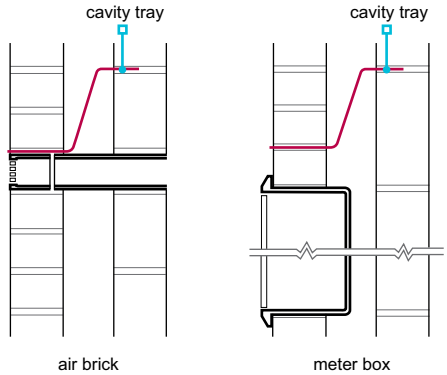

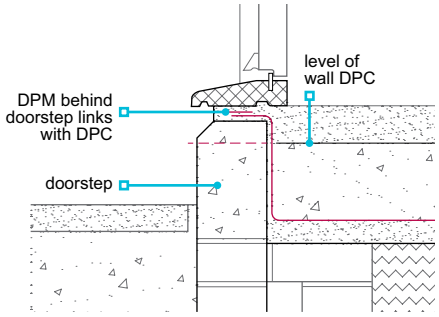

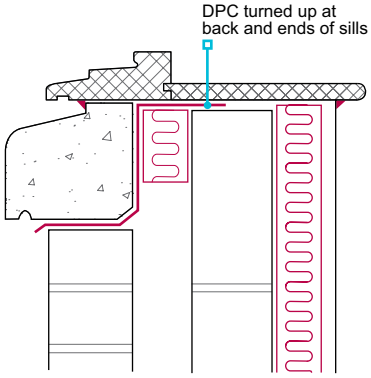

Cavity trays

Cavity trays should be provided at all interruptions to the cavity (e.g. window and door openings and air bricks) unless otherwise protected (e.g. by overhanging eaves). Cavity trays should:

- provide an impervious barrier and ensure that water drains outwards
- cover the end of the lintel and project at least 25mm beyond the outer face of the cavity closer or, where a combined cavity tray and lintel is acceptable, give complete protection to the top of the reveal and vertical DPC
- provide drip protection to door and window heads
- have a 140mm minimum upstand from the inside face of the outer leaf to the outside of the inner leaf
- be shaped to provide 100mm minimum vertical protection above points where mortar droppings could collect
- be provided where the cavity is bridged by air bricks, etc. and the DPC should extend 150mm beyond each side of the bridge
- where not otherwise protected (e.g. by a roof at an appropriate level), be provided over meter boxes
- be in one continuous piece or have sealed or welded joints.

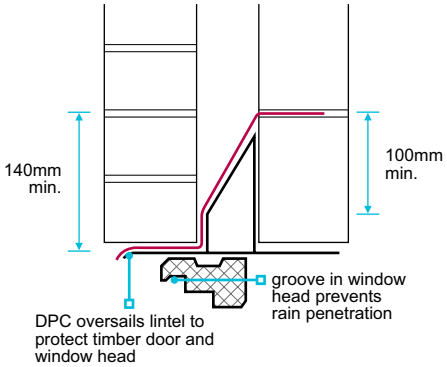

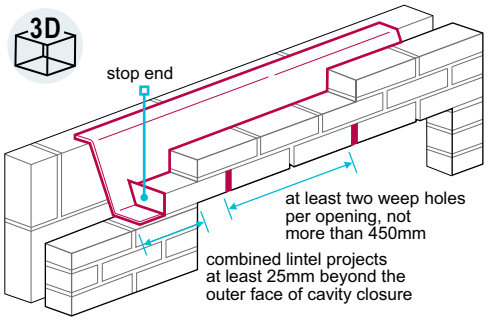

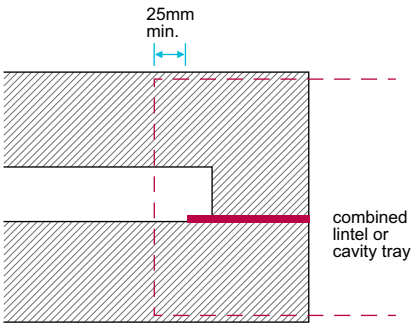

The upstand part of the cavity tray should be returned into the inner leaf unless it is stiff enough to stand against the inner leaf without support. In Scotland, Northern Ireland, the Isle of Man and areas of very severe exposure to driving rain, the upstand part of the damp proof protection should be returned into the inner leaf of masonry (this does not apply at sloping abutments).

Where fairfaced masonry is supported by lintels:

- weep holes should be provided at a maximum of 450mm intervals
- each opening should have at least two weep holes
- cavity trays or combined lintels should have stop ends.

Where the lintel does not require a DPC, it should:

- have a suitable profile and durability
- give complete protection to the top of the reveal and vertical DPC, where provided.

Where the cavity has full-fill insulation, a cavity tray should be used above the highest insulation level, unless the insulation is taken to the top of the wall and is in accordance with the manufacturer's recommendations.

Horizontal DPCs

DPCs should:

- be the correct width
- lap the DPM where appropriate
- be laid on a surface free from projections which could puncture or adversely affect the DPC material
- be fully bedded on mortar where required by the design, or where the building is over three storeys in height
- at ground level, generally be a minimum of 150mm above finished ground or paving level
- where intended to prevent rising damp, joints should have 100mm lapping, or be sealed or welded
- be used in accordance with the manufacturer's recommendations.

The concrete fill in a cavity wall should stop at least 225mm below the base DPC. This may be reduced to 150mm where special foundations, such as rafts, are used.

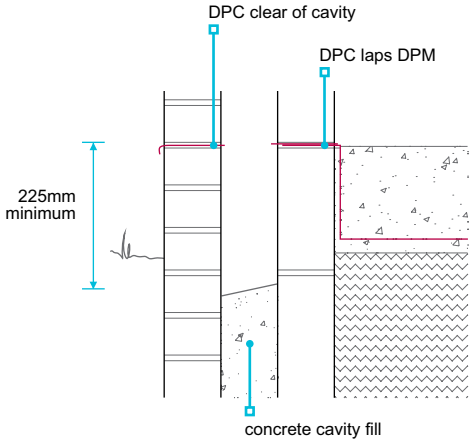

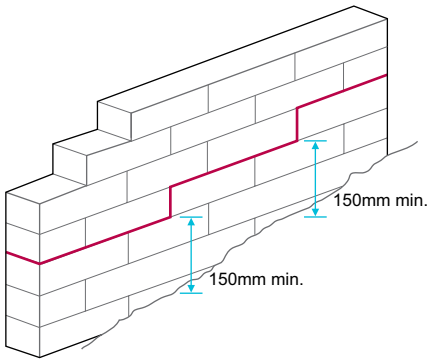

Where a jointed or permeable sill is used, a DPC should be:

- placed between the sill and the outer leaf
- turned up at the back and ends of the sill.

At sills where there is:

- a DPC, it should be lapped with the reveal DPC
- no DPC, the vertical DPC should be continued 150mm below the sill level.

Special DPC detailing may be required at accessible thresholds.

Vertical DPCs

A separate vertical DPC should be provided around openings, extend to the underside of the lintel, and:

- be of a proprietary material assessed in accordance with Technical Requirement R3, or
- 150mm wide DPC material, nailed to the full height of the frame and protrude 25mm into the cavity.

A fillet joint of sealant should not be considered a substitute for good workmanship or DPCs. However, a bead of mastic should be used around openings.

Connections with flashings

Where flashings link with DPCs, (e.g. horizontal or preformed stepped cavity trays), 25mm of mortar below the DPC should also be raked out as the work proceeds to allow for the flashing to be tucked in.

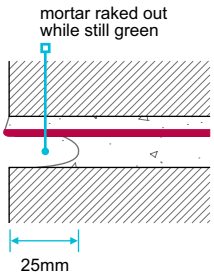

Stage 1

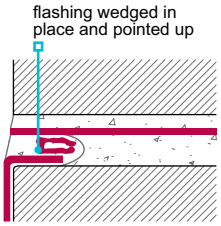

Stage 2

Stepped cavity trays

Where the roof abuts at an angle with the wall, preformed stepped cavity trays should be provided.

To minimise the risk of water ingress below the abutment, preformed stepped cavity trays:

- should be provided where a roof abuts a cavity wall above an enclosed area, e.g. an attached garage
- should have two stop ends at the lowest cavity tray and a weep hole to allow water to drain from the cavity
- are not necessary where the roof is not over an enclosed area, e.g. open car ports and open porches.

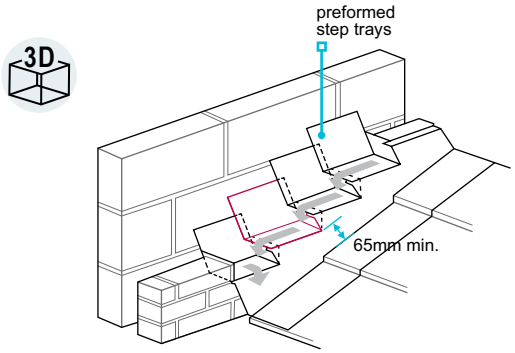

Preformed stepped cavity trays should be installed in accordance with the manufacturer's recommendations and positioned:

- to suit the dimension of the flashing (which should be in accordance with the manufacturer's recommendations or a minimum width of 65mm)
- so that the stepped cavity tray cannot discharge behind flashing (where it is necessary to cut bricks or blocks, the bond should be maintained in the following joint).

Parapet details

Parapet walls should have:

- a DPC under the coping, and a DPC tray starting 150mm minimum above the roof
- coping throating which is 40mm clear of the brickwork.

DPCs in parapet walls should be:

- supported over the cavity to prevent sagging below copings
- fully bedded in mortar
- specified to achieve a good key with the mortar
- sealed to prevent water seeping through the joints.

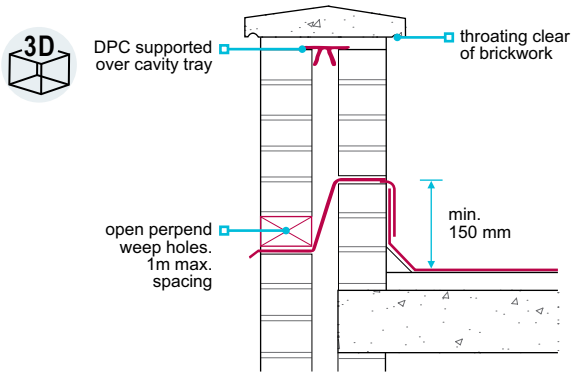

6.1.18 Wall ties

Wall ties of the correct type shall be installed where required, and be suitable for their intended use and location. Issues to be taken into account include:

a) position

b) ties for partial fill insulation.

Wall ties should:

- be in accordance with BS EN 845-1 or Technical Requirement R3
- be of the type as specified in the design
- be long enough to be embedded a minimum of 50mm into each leaf
- in England and Wales, be stainless steel or non-ferrous
- in Northern Ireland, be stainless steel or non-ferrous ties used where the cavity is fully filled with insulation and 75mm wide or more; in Scotland, galvanised ties may be used
- be spaced above and below the DPC in accordance with Table 10.

Position

Table 10: Spacing of wall ties

	Maximum horizontal spacing (mm)	Maximum vertical spacing (mm)
General wall area	900	450
Jamb openings, movement joints, etc.	Within 225 of opening	Not more than 300[1]
Top of gable walls	225 (parallel to the top of the wall)	Not more than 300

Notes

1 The cavity insulation may need cutting to insert the tie.

Water should be prevented from crossing the cavity. Care should be taken to avoid:

- ties sloping down to the inner leaf
- drips being off-centre
- ties having mortar droppings on them.

Cavity walls should be coursed so that the wall tie is level or slopes outwards.

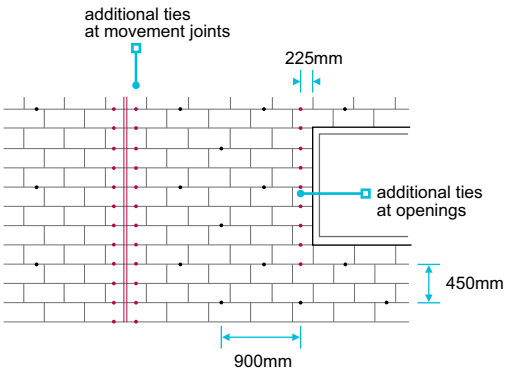

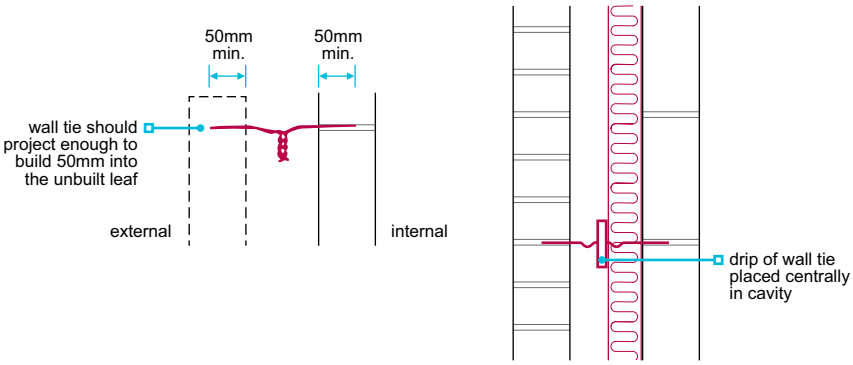

Wall ties should be:

- built in and not pushed into joints
- bedded into the built leaf (by a minimum of 50mm) so that they can have a minimum 50mm bed into the unbuilt leaf
- positioned so that the drip faces downwards.

Ties for partial fill insulation

Where partial cavity fill insulation is being used, it should be held against the inner leaf by retaining devices, which may be clipped to the wall ties. Retaining devices should be:

- compatible with the wall ties
- used in accordance with Technical Requirement R3.

Where 1,200mm boards are used with partial fill cavities, the wall ties should:

- be spaced closer to provide adequate support and restraint
- be spaced at 600mm centres in rows, i.e. not staggered.

6.1.19 Handling materials

Materials shall be handled in such a way as to ensure that the construction is neat, clean and undamaged upon completion.

Materials should be stored properly. Issues to be taken into account include the following:

- Stacks of bricks and blocks should be protected from rain and mud splashes, etc. by covering them with waterproof covers.
- Cement should be stored off the ground and protected from weather.
- Sand should be prevented from spreading and be protected so that it remains clean.

Materials should be handled with care during construction to avoid damage and staining. Chipped or fractured bricks are not acceptable for facework.

Bricks that are tipped on delivery or moved about the site in dumper trucks often have a high degree of wastage. The unloading of all bricks and blocks, especially facing bricks, should be:

- by mechanical means
- directly onto a firm level surface.

Unless bricks have been blended by the manufacturer, bricks from different batches should be mixed to avoid colour patching.

To reduce the risk of efflorescence, newly erected masonry should be covered. This also prevents the mortar being washed out of the joints by rain and stops masonry becoming saturated. Bricks and blocks that become excessively wet can suffer from:

- staining and efflorescence
- increased drying shrinkage, with a greater risk of cracking
- lack of mortar adhesion to mud-stained surfaces.

The work place should be kept clean to reduce mortar splashes to a minimum. Any accidental mortar smears should be lightly brushed off the face after the mortar has taken its first set.

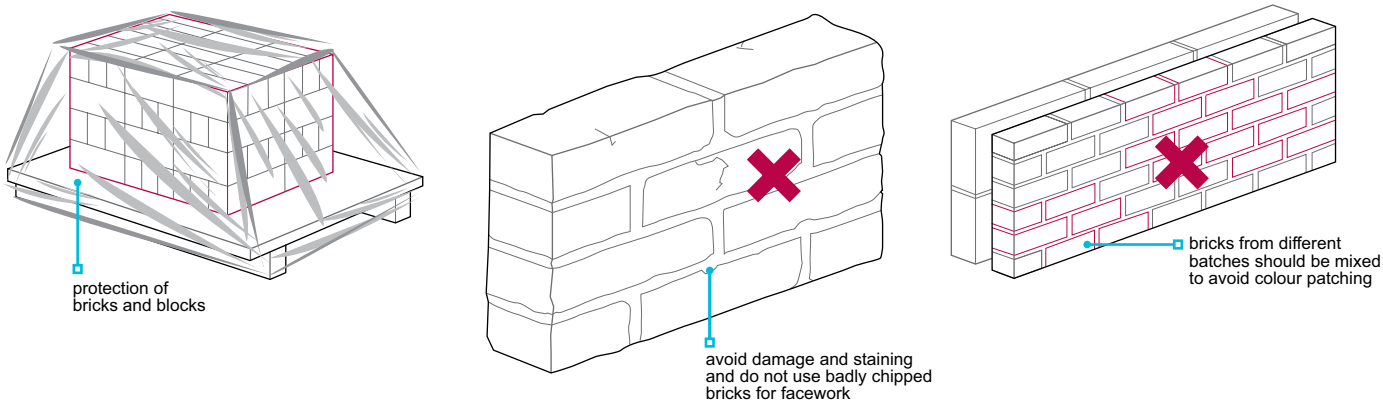

6.1.20 Cold weather working

Also see: Chapter 3.2

Precautions shall be taken to protect walls from damage by frost during construction.

Freshly laid mortar may fail where it freezes.

The use of air entraining agents in cold weather gives better frost resistance to set mortar but does not aid the set. The use of accelerating admixtures and other admixtures should not:

- be relied on as an anti-freeze precaution
- contain calcium chloride.

Ensure the setting times of additives are checked and adhered to in accordance with the manufacturer's recommendations. Cold weather retarders increase setting times.

In cold weather:

- brickwork and blockwork should not be built when the air temperature is below 2°C and falling
- walls should be protected from frost until the mortar has set sufficiently to resist frost damage
- covers should be provided to form a still air space to insulate the wall
- walling damaged by frost will not regain strength and should be taken down and rebuilt when conditions improve.

External timber framed walls

CHAPTER 6.2

This chapter gives guidance on meeting the Technical Requirements for external walls of timber framed homes up to seven storeys high, substantially timber framed homes and timber wall panels.

6.2.1	Compliance	01
6.2.2	Provision of information	01
6.2.3	Design and certification	01
6.2.4	Load-bearing walls	02
6.2.5	Fixing the frame	04
6.2.6	Nails and staples	05
6.2.7	Sheathing	05
6.2.8	Differential movement	05
6.2.9	Fire resistance	09
6.2.10	Protection from moisture	10
6.2.11	Timber preservation	12
6.2.12	Vapour control layers	12
6.2.13	Breather membranes	12
6.2.14	Wall ties and fixings	13
6.2.15	Insulation	13

NHBC

Raising Standards. Protecting Homeowners

6.2.1 Compliance

Also see: Chapter 2.1

External timber framed walls shall comply with the Technical Requirements.

External timber framed walls that comply with the guidance in this chapter will generally be acceptable.

Where the components of the timber frame cannot be inspected on site (e.g. closed panels or fully fitted out volumetric units) the system should be subject to review by NHBC. Please refer to the MMC Hub at **www.nhbc.co.uk/MMCHub**.

6.2.2 Provision of information

Designs and specifications shall be produced in a clearly understandable format, include all relevant information and be distributed to all appropriate personnel.

Clear and fully detailed drawings should be available on site to enable work to be carried out in accordance with the design. Design and specification information should be issued to site supervisors, relevant specialist subcontractors and suppliers, and includes the following:

- A full set of drawings.
- Materials specification.
- The position and materials for cavity barriers in accordance with relevant building regulations.
- Fixing schedules.
- Nailing details.
- Manufacturer's recommendations relating to proprietary items.

The fixing schedule should detail every connection which is to be made on site, including those for structural connections, framing, wall ties, breather membranes, sheathing and vapour control layers, and should show as appropriate:

- number and spacing of fixings
- size and type of fixing, including material and corrosion protection
- method of fixing, e.g. skew nailing.

Where wall design relies on plasterboard to take racking forces, the design should:

- clearly define those walls
- include the type and spacing of fixings required.

6.2.3 Design checking and certification

*Also see: **Technical@nhbc.co.uk***

Design of the superstructure shall be adequately checked.

Homes with a timber frame superstructure require certification confirming that the design has been checked by an NHBC approved timber frame certifier.

The timber frame certifier should:

- be listed on NHBC's list of timber frame certifiers
- be a suitably qualified civil or structural engineer with a minimum of three years' experience in timber frame construction
- not be the designer of the timber frame
- complete and sign a certificate confirming assessment of structural adequacy for each specific project
- provide the registered builder with the completed and signed certificate.

The registered builder should ensure that the completed timber frame certificate is available on site for inspection by NHBC.

Contact NHBC Standards, Innovation and Research:

- if you require contact details of frame certifiers, or
- to apply to become a timber frame certifier.

Alternatively, timber frame superstructures from Gold level members of the Structural Timber Association's Assure scheme, who have engaged Silver/Gold level structural designers and engineers, are acceptable without additional certification.

The registered builder should ensure that a letter from the manufacturer is available on site for inspection by NHBC.

Designs should be submitted to NHBC when proposed buildings are four storeys or more and the floor joists are solid timber.

6.2.4 Load-bearing walls

Load-bearing timber framed walls shall be constructed to support and transfer loads to foundations safely and without undue movement. Issues to be taken into account include:

a) timber elements
b) joints between panels and other elements
c) positioning of sole plates
d) packing under sole plates
e) fixing panels
f) support of prefabricated chimneys.

Timber elements

Load-bearing timber framed walls should be in accordance with BS EN 1995-1-1, and take into account:

- wind loads
- roof loads
- floor loads.

Timber in external framed walls should be:

- a suitable grade in accordance with BS EN 338 and BS EN 14081-1
- dry graded and marked in accordance with BS 4978
- I-studs assessed in accordance with Technical Requirement R3.

Individual timber studs should have:

- a minimum width of 37mm
- a maximum spacing of 600mm, unless other adequate support is provided for wall boards and fixings.

Narrow or inaccessible gaps between studs which are difficult to insulate should be avoided.

Lintels and cripple studs should be provided at openings in load-bearing panels except where:

- the opening does not affect the stud spacing, or
- supported loads are carried by a rim beam or perimeter joist.

Sheathing and associated fixings should be structurally adequate, and resist racking due to wind and other forces.

Where masonry cladding is used, additional studs may be required at openings to fix wall ties.

Multiple studs should be included to support multiple joists and other point loads, unless otherwise specified by the designer. Where head binders are not provided, joists and roof trusses, including girder trusses and other similar loads, should bear directly over studs.

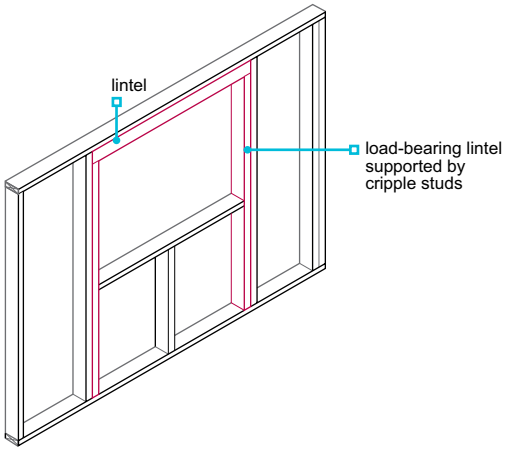

Joints between panels and other elements

Wall panels should be:

- securely fixed together, and securely fixed to the floor and roof framing
- constructed to prevent buckling.

At joints between wall panels, sole plates and head binders should be provided to bind panels together. Joints in sole plates and head binders should:

- occur over a stud
- not coincide with joints between panels.

Positioning of sole plates

When setting out:

- the substructure should be correctly set out to receive the timber frame
- the timber frame should be checked to ensure that it is erected accurately, both horizontally and vertically
- the load from the frame should be supported as intended in the design
- protection should be provided where ledges form moisture traps.

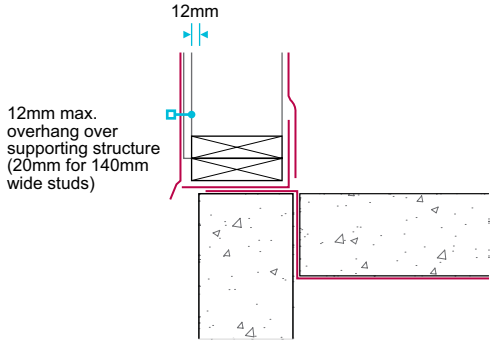

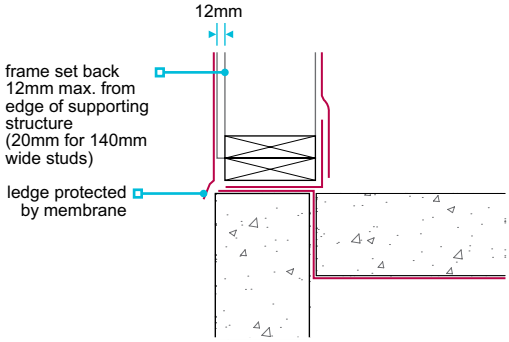

Packing under sole plates

Where packing is required to ensure the timber frame or sole plate is level:

- permanent packing should be used for gaps less than 5mm
- grout and mortar should not be used for gaps less than 5mm
- hollow plastic packing with reduced bearing surfaces should not be used
- temporary spacers can remain in place provided they are durable and non-degradable.

Permanent packing should be:

- designed and approved by the timber frame designer to suit the horizontal and vertical loads on the sole plate
- at least the same plan area as the load points, e.g. studs or posts.

Packing exceeding 20mm should be agreed between the timber frame manufacturer's engineer and NHBC. The following methods are generally acceptable to NHBC for packing up to 20mm.

Permanent structural packing under sole plate

The sole plate should be levelled on temporary spacers.

When the first lift construction (including wall panels, first floor structure, or roof structure in a single storey building) has been erected, permanent packing should be placed under the sole plate, which can be:

- free-flowing non-shrinkable grout for the full length and width of the sole plate, or
- individual packers placed under each load point, e.g. stud or post.

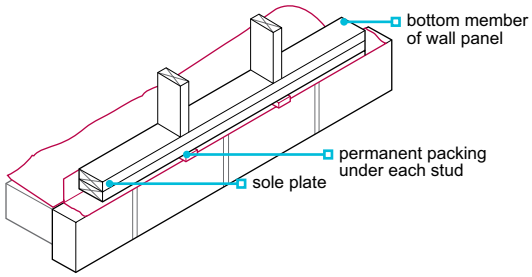

Bedding of the sole plate

The sole plate should be laid and levelled on a continuous bed of mortar prior to the erection of the wall panels.

The bedding should extend the full width of the sole plate. Care is needed to ensure that the bedding is not disturbed during the fixing of the sole plate.

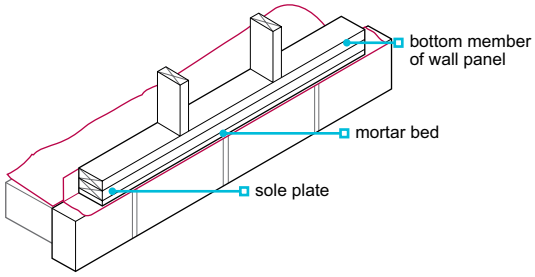

Double sole plate 'sandwich'
The lower sole plate should be fixed to follow the contours of the supporting structure.

The upper sole plate should then be fixed on top and levelled with temporary spacers inserted between the sole plates.

When the first lift construction has been erected, permanent packing should be inserted under each load point, e.g. stud or post. As this method uses an additional sole plate, the extra shrinkage should be taken into account.

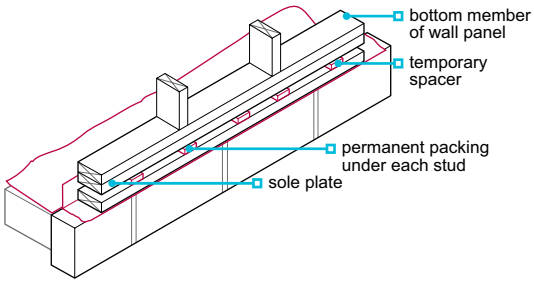

Fixing panels

The wall panels should be adequately fixed to the sole plate so that the frame can resist both lateral and vertical forces.

When fixing panels:

- fixings, including nailed joints and sheathing, should be as scheduled in the design
- they should be securely fixed together, to the floor and to the roof framing
- sole plates and head binders should be provided to bind the panels together.

Support of prefabricated chimneys

Prefabricated chimneys should be supported by the:

- masonry cladding, or
- the timber frame, including any roof construction supported by the timber frame.

6.2.5 Fixing the frame

The timber frame shall be suitably fixed to the substructure.

Shotfiring

Where shotfiring:

- into masonry, solid concrete blocks should be specified as BS EN 771 with a minimum crushing strength of 7.3N/mm^2 and positioned to receive fixings
- the blocks in beam and block floors should be grouted
- care should be taken not to spall edges of masonry or slabs.

Anchoring

When anchoring the frame:

- the sole plate should be adequately anchored to the substructure so that the frame can resist both lateral and vertical forces
- care should be taken to avoid splitting timber plates or damaging the substructure.

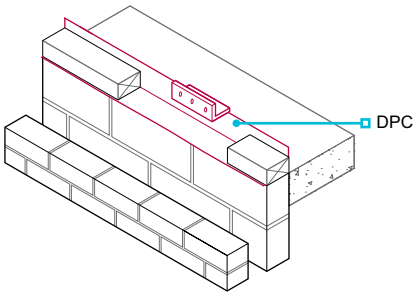

Fixing to plate

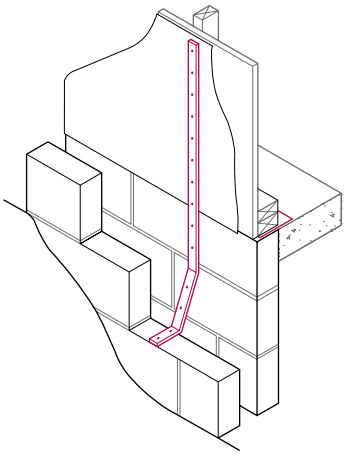

Fixing to stud

Holding-down devices should be durable, as detailed in the design and manufactured from:

- austenitic stainless steel to BS EN 10088-1, minimum grade 1.4301
- galvanised mild steel with zinc coating to BS EN ISO 1461, minimum coating 940 g/m^2 on each side.

Sole plate anchors within the internal envelope should be galvanised mild steel, minimum coating Z275.

6.2.6 Nails and staples

Nails and staples shall be durable and of the correct type to provide adequate mechanical fixing.

Nails for fixing sheathing or timber should be either:

- austenitic stainless steel
- galvanised, or
- sheradized.

Staples for fixing breather membranes should be:

- austenitic stainless steel, or
- other material of similar strength and corrosion resistance.

6.2.7 Sheathing

Sheathing shall be durable and capable of providing structural resistance to racking

The following materials are acceptable:

Plywood	BS EN 636 and BS EN 13986 Table 7
Oriented strand board	BS EN 300 type OSB/3 or 4
Moisture-resistant chipboard	BS EN 312 type P5 or P7
Medium board	BS EN 622-3 type MBH.HLS1 or MBH.HLS2
Impregnated soft board	BS EN 622-4 type SB.HLS
Proprietary sheathing materials	Technical Requirement R3 and used in accordance with the assessment.

*Also see: Institution of Gas Engineers and Managers (**www.igem.org.uk**) and 'Guidance on detailing to accommodate differential movement in timber frame buildings' (**www.uktfa.com**)*

6.2.8 Differential movement

Timber structures shall account for differential movement between the timber frame wall and other building elements.

As the timber frame dries out, it will shrink and the overall height will reduce. The extent of the differential movement increases with the number of storeys, and will typically occur between the timber frame and other parts of the construction, including:

- door and window openings
- eaves and verges
- balconies (including Juliet balconies)
- service entries
- openings for drive-throughs
- staircases and lift shaft enclosures (where they are not timber framed)
- the interface of the timber frame with any other construction at each floor level where cladding is fixed to the timber frame.

Movement joints should be provided to accommodate the expected movement. Joints should be detailed to:

- accommodate the expected amount of shrinkage or expansion safely
- provide a weather resistant and durable joint
- be protected by a cover strip where the movement gap/joint is expected to be more than 35mm.

In the absence of project-specific calculations, gaps in accordance with Table 1 should be provided.

Table 1: Gap sizes to accommodate differential movement

Gap location	Opening and closing gaps (mm)	
	Floor joists	
	Solid timber (mm)	Engineered I-joist (mm)
Eaves/verge	Add 5mm to gap dimension at level below	
Sixth storey	Specialist calculations to be submitted to NHBC[2]	61
Fifth storey		53
Fourth storey		45
Third storey	45	35
Second storey	35	25
First storey	20	15
Ground storey[1]	5	5

Notes

1 Ground storey or lowest level of timber frame.
2 Calculations, where required, are to be based on BS EN 1995-1-1.

Table 1 is based on the following:

- The table allows for a 2mm thickness of compressible material in closing gaps. Check the manufacturer's product details.
- Timber components are not saturated and have normal moisture contents at the time of construction, e.g. less than 20% and tight-jointed construction.
- The ground floor is concrete. For ground floors of timber joists, add 15mm for solid timber and 10mm for engineered I-joists.
- Timber joist and rim beam/header joist have a maximum depth of 240mm.
- Timber frame floor cross-section is as shown below, with maximum 45mm deep timber plates/binders.
- Single head binder at the eaves. Maximum double sole plates.
- Outer leaf brickwork with expansion rates no greater than 2.5mm per storey.
- Brickwork up to five storeys, with lightweight cladding above five storeys.
- Lightweight cladding – floor level joints must be 15mm for solid timber and 10mm for engineered I-joists.

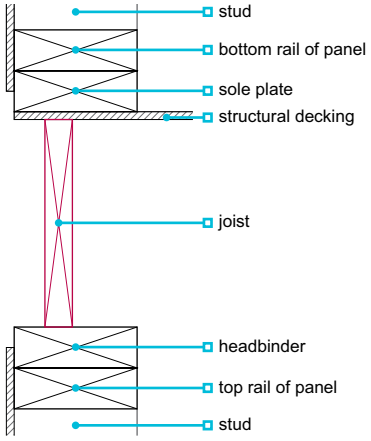

Timber frame construction on which Table 1 is based

Differential movement should be accommodated by the timber frame and by the services affected, especially where they:

- are within the timber frame construction/envelope
- pass through the envelope.

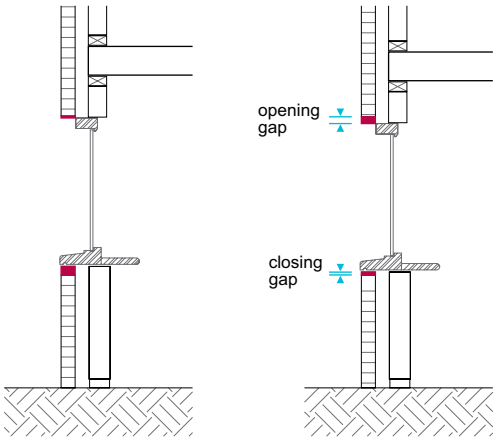

as built after movement

Common details

The following sketches consider downward movement of the timber frame and upward brick expansion, taken as 2.5mm per storey of clay masonry. Cavity trays are omitted for clarity.

Window head and sill with masonry cladding

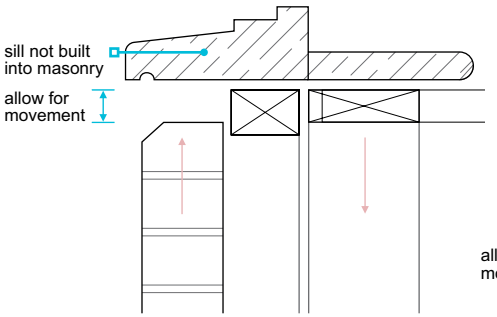

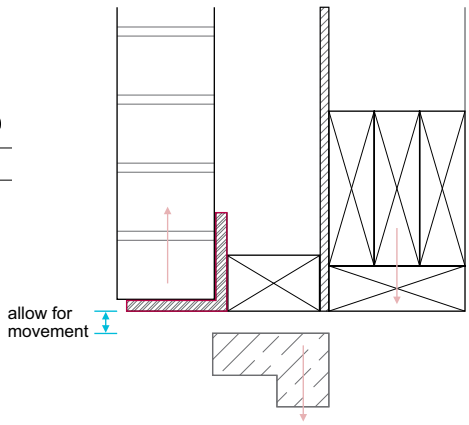

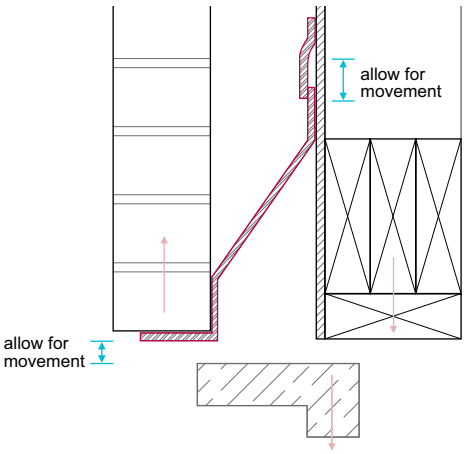

Window head and sill with lightweight cladding

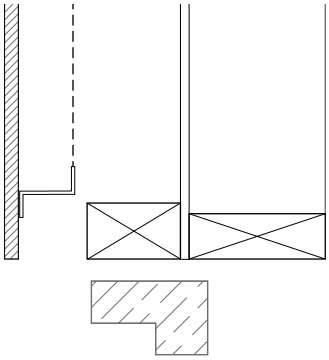

no differential movement

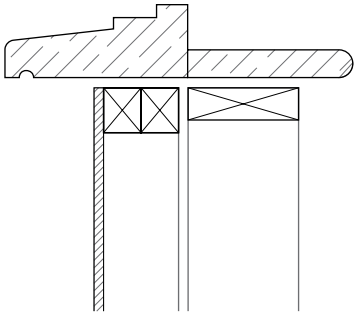

no differential movement

Roof to vertical abutment

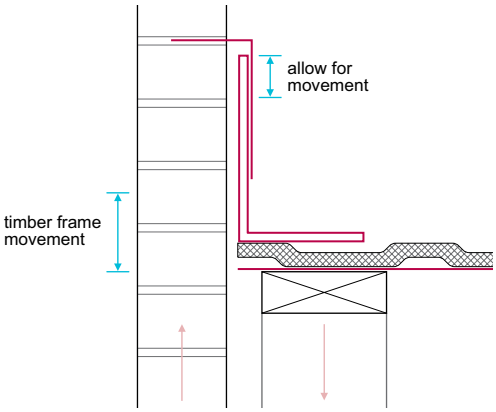

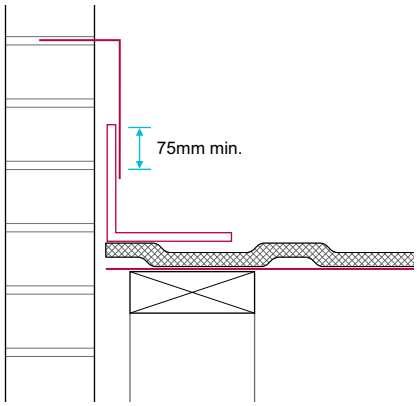

Timber frame interface with concrete or masonry stairs and common areas

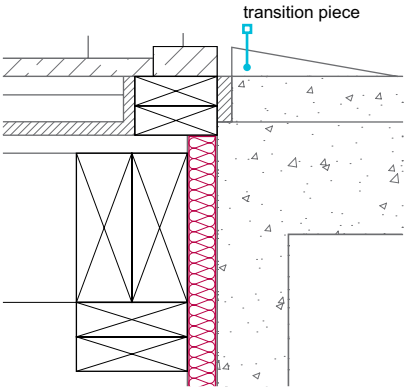

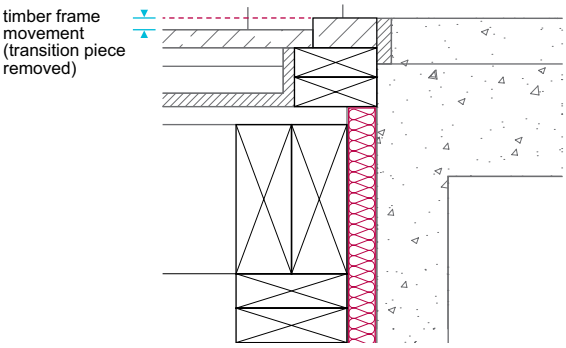

after movement

Eaves and verges

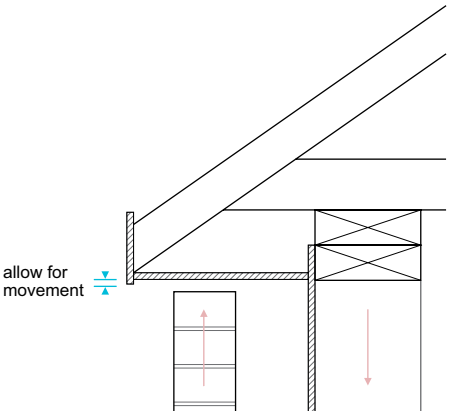

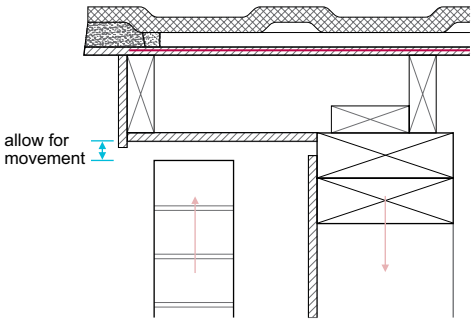

Services

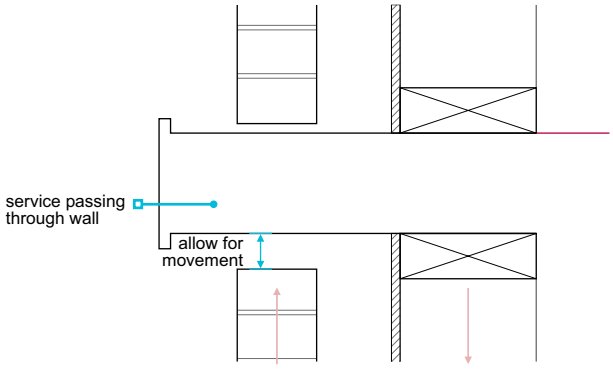

Drive through

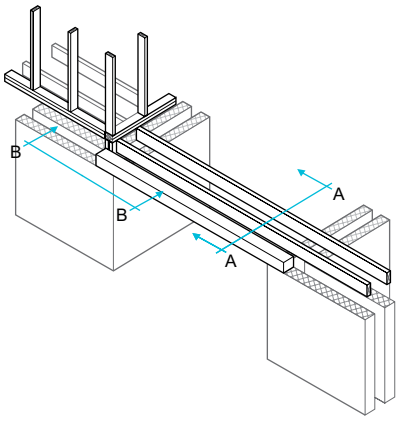

Drive through

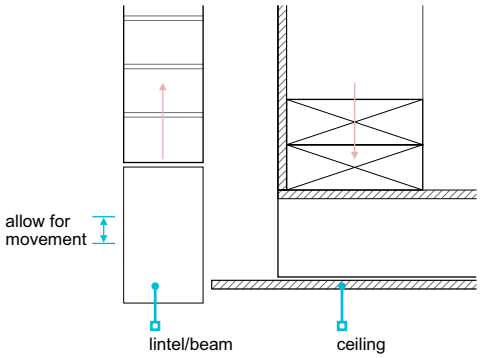

Section A-A

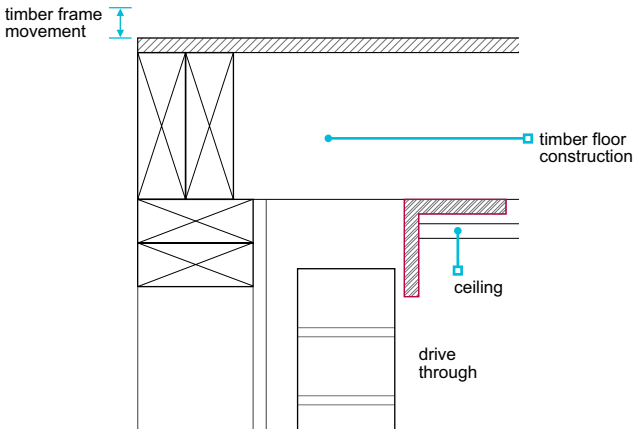

Section B-B

Lightweight wall cladding – joint at each floor level (with and without insulation in cavity)

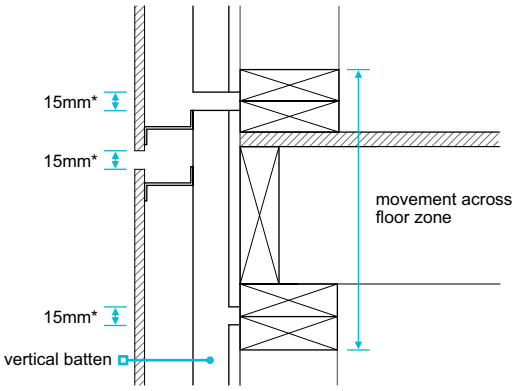

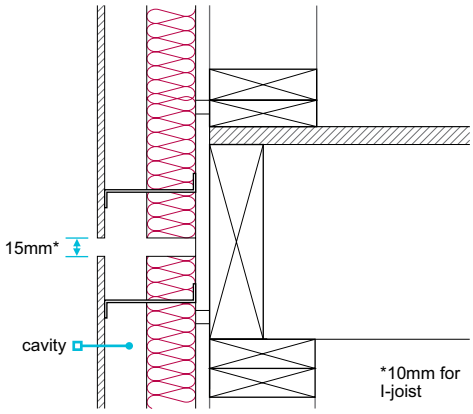

Lightweight cladding and masonry plinth

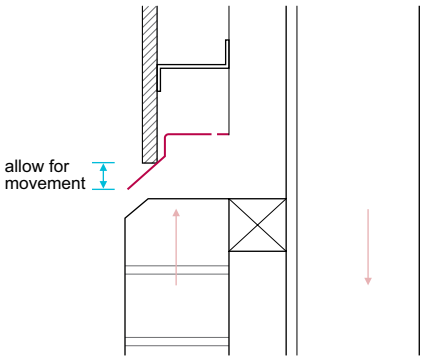

Balcony abutment – lightweight cladding

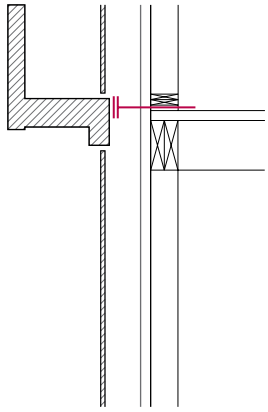

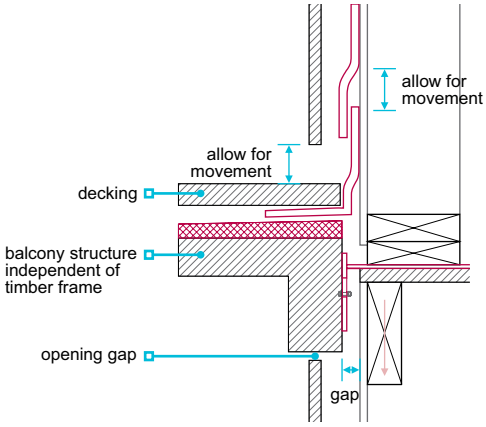

Balcony abutment – masonry cladding

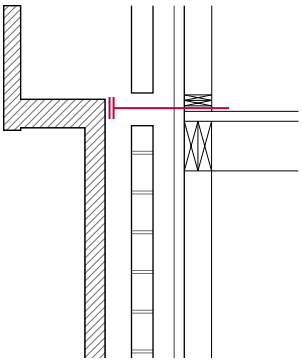

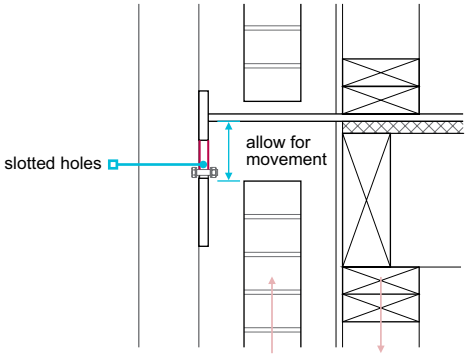

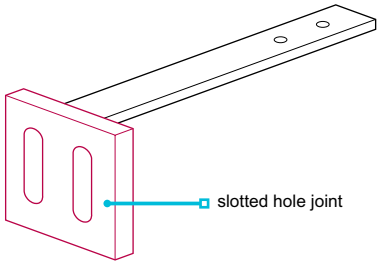

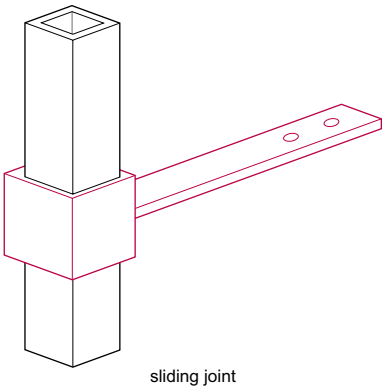

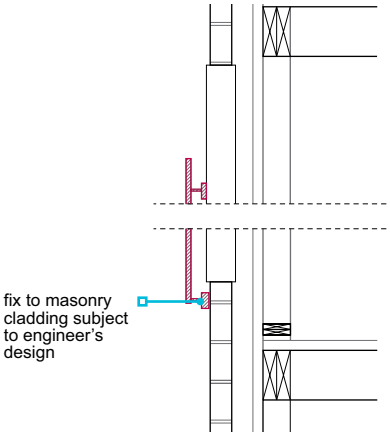

Walls to flat roof abutment

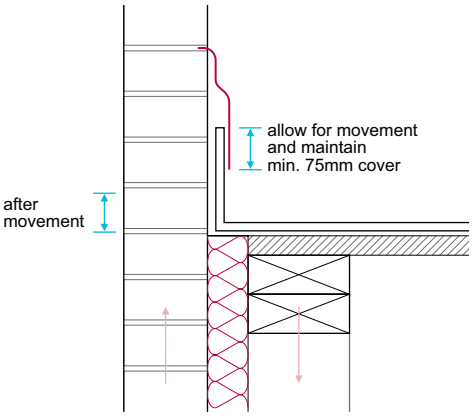

*Also see: 'Fire Prevention on Construction Sites' Construction Federation and Fire Protection Association (**www.thefpa.co.uk**) 'Site Safety Strategy' STA '16 Steps to Fire Safety' STA 'Design Guide to Separating Distances' (**www.uktfa.com**)*

6.2.9 Fire resistance

Timber walls and panels shall control and resist the spread of fire and smoke. Issues to be taken into account include:

a) cavity barriers and fire stops **b) services.**

All building elements should have adequate fire resistance. Materials in accordance with building regulations are acceptable; other materials should be assessed in accordance with Technical Requirement R3.

For guidance on the prevention of fire during construction; refer to 'Fire Prevention on Construction Sites' jointly published by the Construction Federation and the Fire Protection Association (**www.thefpa.co.uk**), and guidance from the Structural Timber Association (**www.structuraltimber.co.uk**) under the 'Site Safety Strategy', including the '16 Steps to Fire Safety' and the 'Design Guide to Separating Distances'.

Cavity barriers and fire stops

The installation, position and materials for cavity barriers and fire stops should be in accordance with the relevant building regulations and the design.

Horizontal and vertical cavity barriers should be protected by DPCs arranged to shed moisture away from the sheathing. Horizontal cavity barriers, except under eaves, should be protected with:

- DPC tray with a 100mm minimum upstand, or
- a polyethylene-encased cavity barrier with a 100mm minimum upstand.

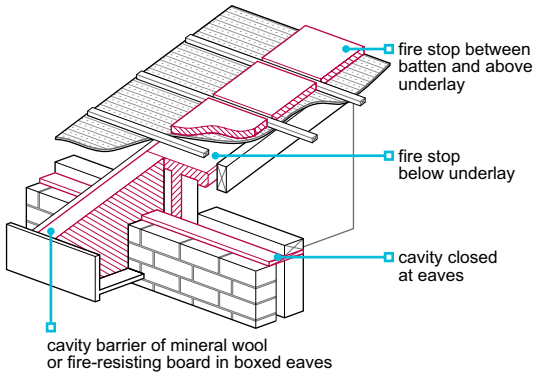

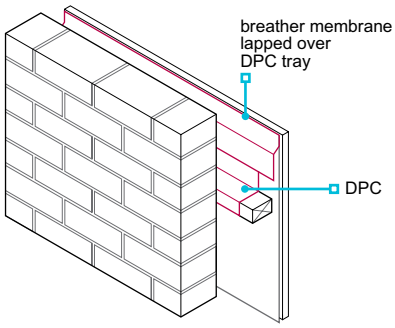

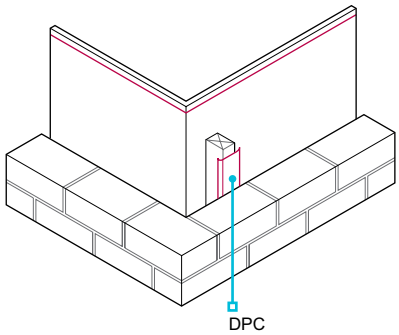

Services

Only the services shown in the design should be installed in separating walls and:

- service outlets should not impair the fire resistance of floors and walls
- service mains should not pass through separating wall cavities.

Notching or drilling of structural timber members should be carried out as detailed in the design. If these details are not available, the designer should be consulted before such operations are begun.

In Scotland, services are not permitted within a timber framed separating wall.

6.2.10 Protection from moisture

Also see: Chapter 6.1 and 6.9

Timber structures and panels shall be adequately protected from the effects of moisture. Issues to be taken in to account include:

a) cavity construction

b) DPCs.

Cavity construction

A drained and vented cavity should be provided to reduce the risk of rain penetrating the frame. Cavity widths, measured between the cladding and sheathing, should be in accordance with Table 2.

Table 2: Cavity widths

Cladding	Minimum cavity width
Masonry	50mm nominal
Render on backed lathing	25mm nominal
Vertical tile hanging without underlay	No vertical cavity required when a breather membrane is fitted to the sheathing
Other cladding[1]	15mm

Notes

1 See Chapter 6.9 'Curtain walling and cladding'.

In areas of very severe exposure to wind driven rain, wall construction should include a 50mm cavity between the sheathing and the cladding and:

- a high performance breather membrane, or
- masonry cladding which is rendered or clad with an impervious material.

Cavities should be:

- vented to allow some limited, but not necessarily through, movement of air
- kept clean, free of obstructions and capable of draining freely.

Where wall areas are divided by horizontal cavity barriers, openings should be provided to each section:

- equivalent to open brick perpends every 1.2m
- located to prevent the ingress of rain, and
- below the lowest timber.

Proprietary perpend ventilators should be used to provide drainage of the cavity.

Horizontal battens, which obstruct the drained and vented cavity, should not be used to support cladding (except tile hanging).

Battens supporting lightweight cladding should be fixed to studs.

Masonry cladding should be constructed in accordance with Chapter 6.1 'External masonry walls'. Proprietary cladding should be fixed in accordance with the manufacturer's recommendations and Chapter 6.9 'Curtain walling and cladding'.

Drained and vented cavities should not contain electricity cables other than meter tails.

DPCs

DPCs and trays should be:

- fitted at openings to prevent rain penetration
- installed below the sole plates of ground floor walls and internal partitions.

In Northern Ireland, Scotland and the Isle of Man, and in areas of severe or very severe exposure to driving rain, masonry should form a rebate at the reveals of openings to avoid a straight through joint where the frame abuts the masonry.

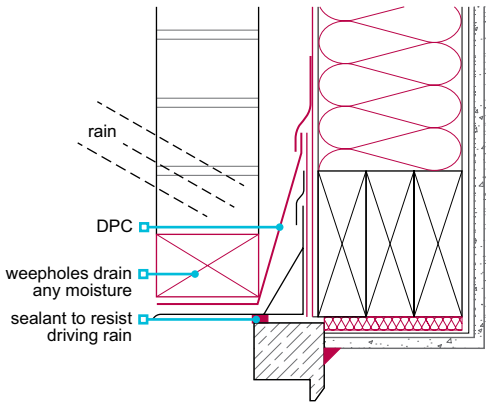

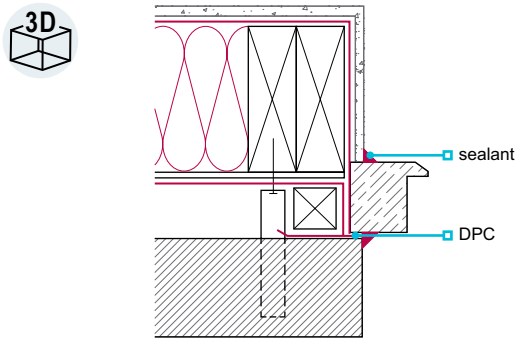

Cavities should:

- extend below DPC to allow drainage
- be kept clear and be vented to allow limited, but not necessarily through, movement of air
- be suitably drained to prevent water build-up.

The lowest timber should be a minimum of 75mm or 150mm above ground level, depending on the drainage arrangements.

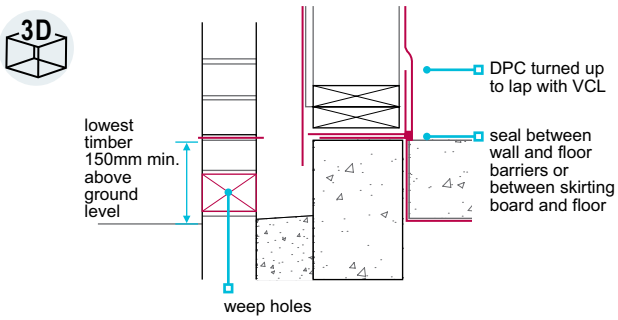

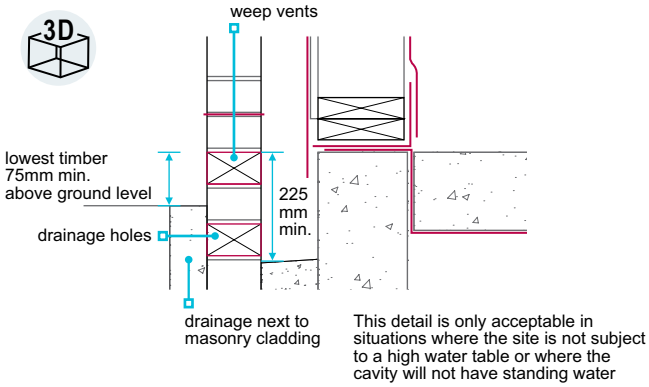

6.2.11 Timber preservation

Timber and timber products shall either be naturally durable or treated with preservative to give adequate resistance against decay and insect attack.

The following should be treated in accordance with Chapter 3.3 'Timber preservation (natural solid timber)':

- Timber framing.
- Timber cladding.
- I-studs manufactured from timber of durability class 'moderately durable' or lower.

6.2.12 Vapour control layers

Vapour control layers shall be installed correctly and restrict the passage of water from within the home to the timber frame.

Vapour control layers should be:

- 500 gauge (120 micron) polyethylene sheet, vapour control plasterboard or a product assessed in accordance with Technical Requirement R3
- adequately fixed to the warm side of the insulation and frame (framing timbers should have a moisture content of less than 20%)
- placed to cover the external framed wall area, including rails, studs, reveals, lintels and sills
- fixed at 250mm centres to the top and bottom of the frame, at laps and around openings
- lapped with the DPC
- made good where damage has occured.

Joints in vapour control membranes should:

- have 100mm minimum laps
- be located on studs or noggings.

Where vapour control plasterboard is used, joints should be:

- positioned on studs or noggings
- filled, taped and finished
- cut with care to avoid displacing the vapour control material.

6.2.13 Breather membranes

Breather membranes shall be correctly installed to protect the sheathing and frame from moisture, and allow water vapour from within the frame to pass into the cavity.

Breather membranes should be:

- vapour resistant to less than 0.6MNs/g (0.12 Sd) when tested in accordance with BS EN ISO 12572 using the set of conditions C and using five test specimens.
- Type 1 to BS 4016 in areas of very severe exposure to wind driven rain, unless impervious or rendered masonry cladding is used
- capable of resisting water penetration
- durable and adequately strong when wet, to resist site damage
- self extinguishing
- fixed so that vertical joints are staggered where possible, and at regular intervals, to prevent damage by wind
- lapped so that each joint is protected and moisture drains outwards and downwards
- lapped so that upper layers are over lower layers to ensure rain runs away from the sheathing
- lapped so that water is shed away from the lowest timber
- lapped with a minimum 100mm overlap on horizontal joints and 150mm on vertical joints
- fixed at a maximum spacing of 600mm horizontally and 300mm vertically
- fixed at a maximum spacing of 150mm around openings
- marked with stud positions for wall tie fixing
- applied using fixings that are in accordance with this chapter
- repaired or replaced before proceeding with the cladding, if damaged.

When bitumen impregnated fibre building board is used and a breather membrane is not specified, the joints of the boards should be closely butted and horizontal joints sealed to prevent water ingress.

When a breather membrane is not required, the bottom frame members should be protected from water in the cavity.

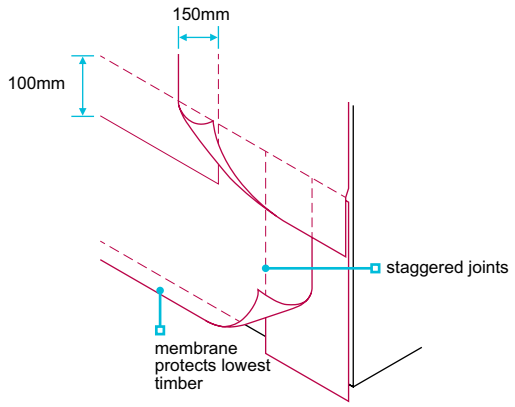

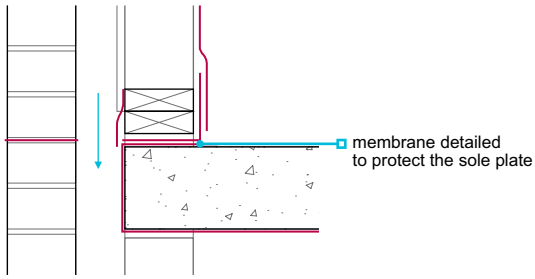

6.2.14 Wall ties and fixings

Wall ties and fixings shall adequately connect the cladding to the timber frame.

Wall ties and their fixings should be:

- compliant with BS 845-1
- in accordance with the design
- capable of accommodating differential movement
- of the type specified in the design
- of austenitic stainless steel
- fixed to the studs and not the sheathing
- kept clean and free from mortar droppings
- spaced at a maximum of 600mm horizontally and 450mm vertically
- spaced at jambs of openings and at movement joints at a maximum of 300mm vertically and within 225mm of the masonry reveal or movement joint; additional studs may be needed.
- spaced within 225mm of the top of the wall, including at gables
- inclined away from the sheathing so that the slope is maintained following differential movement.

6.2.15 Insulation

Also see: BRE Report 'Thermal insulation: avoiding risks'

Insulation shall be correctly installed and provide suitable performance.

Insulation should be:

- breathable, e.g. mineral wool (rock or glass), or
- assessed in accordance with Technical Requirement R3 for use in timber frame wall panels.

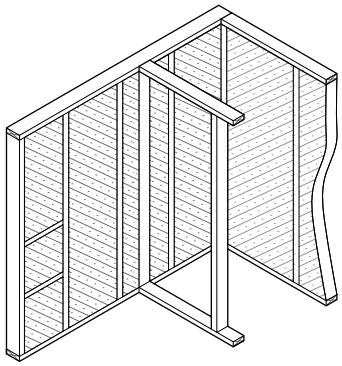

Insulation should generally be placed within the stud void and cover the whole wall area between studs. No gaps should be left:

- at corners
- at junctions with partitions
- against studs or rails
- against noggings
- behind service panels.

In England and Wales, account should be taken of Accredited Details.

Water and heating services within walls should be on the warm side of the insulation.

Where partial fill cavity insulation with a 50mm residual cavity is used, it should be assessed in accordance with Technical Requirement R3 as an integral part of the wall system.

Internal walls

CHAPTER 6.3

This chapter gives guidance on meeting the Technical Requirements for internal walls, including:

- **separating and compartment walls**
- **internal partition walls.**

6.3.1	Compliance	01
6.3.2	Provision of information	01
6.3.3	Supporting load-bearing internal walls	01
6.3.4	Masonry walls	01
6.3.5	Load-bearing timber walls	03
6.3.6	Fire resistance	04
6.3.7	Sound insulation	05
6.3.8	Partitions: internal non load-bearing	07
6.3.9	Construction of timber partitions	07
6.3.10	Construction of steel framed partitions	09
6.3.11	Construction of proprietary systems	09
6.3.12	Plasterboard	09
6.3.13	Damp proof courses	10
6.3.14	Components	10

NHBC

Raising Standards. Protecting Homeowners

6.3.1 Compliance

Also see: Chapter 2.1

Internal walls shall comply with the Technical Requirements.

Internal walls, including separating, compartment and partition walls, which comply with the guidance in this chapter will generally be acceptable.

6.3.2 Provision of information

Designs and specifications shall be produced in a clearly understandable format, include all relevant information and be distributed to all appropriate personnel.

Design and specification information should be issued to site supervisors, relevant specialist subcontractors and suppliers, and include the following information:

- Wall layout, with all dimensions shown.
- Position and size of openings and lintels.
- Details of junctions, indicating fire stopping where applicable.
- Details of wall constructions and materials, ties and restraints.
- Details of junctions between a separating or compartment wall and a pitched or flat roof.
- Details of pipes and cables where they penetrate walls, including fire-resisting walls.
- Manufacturer's recommendations for assembly and fixing of propriety components.

6.3.3 Supporting load-bearing internal walls

Loadbearing internal walls shall be adequately supported by foundations.

Load-bearing internal walls should have:

- a foundation, or
- a means of support that transfers loads safely to a foundation.

Foundations should be in accordance with Part 4 of these Standards, including, where applicable, Chapter 4.3 'Strip and trench fill foundations' and Chapter 4.4 'Raft, pile, beam and pier foundations'.

6.3.4 Masonry walls

Also see: Chapters 6.1, 6.4 and 9.2

Internal masonry walls shall be designed to support and transfer loads to foundations safely and without undue movement. Issues to be taken into account include:

a) structural elements
b) mortar mix and jointing
c) workmanship
d) bonding and tying
e) lateral restraint
f) masonry separating walls
g) lintels and beams.

Structural elements

Structural design of masonry walls should be in accordance with BS EN 1996-1-1.

Bricks and blocks should be selected in accordance with their intended use and as recommended in Table 1.

Table 1: Bricks and blocks in buildings up to three storeys high

Height of wall	Unit	Minimum compressive strength
One or two storey	Blocks	2.9 N/mm²
	Bricks	9.0 N/mm²
Lowest storey of a three storey wall, or where individual storeys exceed 2.7m	Blocks	7.3 N/mm²
	Bricks	13.0 N/mm²
Upper storeys of a three storey wall	Blocks	2.9 N/mm²
	Bricks	9.0 N/mm²

Where buildings are more than three storeys high, masonry should be designed in accordance with Technical Requirement R5 and the block strength specified in the design.

Precast concrete blocks

Concrete blocks should comply with BS EN 771. The maximum load-bearing capacity of the wall should not exceed the recommendations of the manufacturer.

Flue blocks should be in accordance with the manufacturer's recommendations.

Bricks

Bricks should comply with the relevant British Standards:

Clay bricks	BS EN 771-1
Calcium silicate bricks	BS EN 771-2
Concrete bricks	BS EN 771-3

When used in a separating wall, masonry should:

- be in accordance with the design information
- provide a suitable level of sound resistance.

Mortar mix and jointing

Mortar should:

- be the correct mix and used within two hours, unless it is retarded mortar
- not be re-tempered if it has started to set
- include sulfate-resisting cement where required.

Admixtures, retarded mortars and premixed mortars should be:

- compatible with masonry and other components
- used in accordance with the manufacturer's recommendations.

Air-entraining agents:

- can help reduce frost damage but cannot be used as anti-freeze
- should be carefully measured for each batch and be in accordance with the manufacturer's instructions.

Bricks and blocks should be laid on a full bed of mortar, with perpends solidly filled.

Where walls are to be finished with wet plaster, joints should be raked out to a shallow depth to provide a key. For dry lining, mortar joints should be struck off flush.

Workmanship

Internal masonry walls and associated works should be:

- constructed in lifts/stages to prevent the distortion of wall panels during construction
- accurately set out
- reasonably plane and true
- plumb, with courses level.

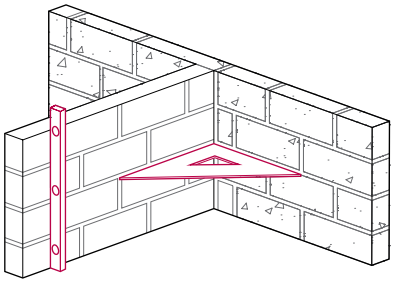

Bonding and tying

Internal masonry walls should:

- maintain a regular bonding pattern
- not include bricks or blocks of different types in the same wall, to avoid cracking
- be fully bonded or tied, either with a tooth at alternate courses, or an expanded metal tie (or equivalent) at a maximum vertical spacing of 300mm.

Joist filling should be brick or blockwork, without excessive mortar joints.

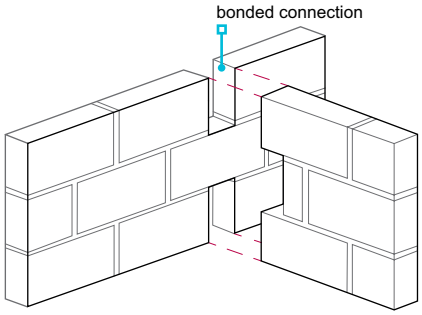

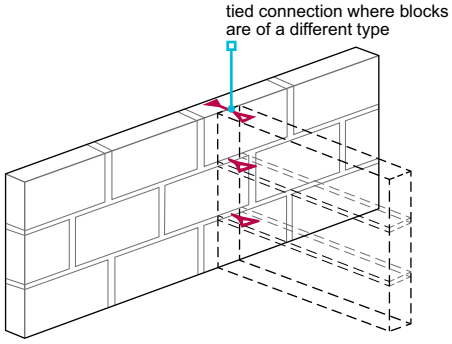

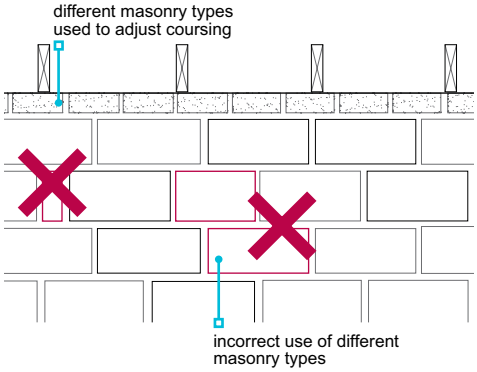

Lateral restraint

Load-bearing masonry walls, including separating walls, should be provided with lateral restraint at:

- each floor level
- ceiling level below a roof.

Restraint straps should be provided to separating walls on each level, at a maximum of 2m centres, when the floor:

- is not on, or near, the same level
- does not provide adequate restraint.

Lateral restraint should be provided in accordance with Chapter 6.4 'Timber and concrete upper floors'.

Timber floors

Adequate restraint can be provided by timber floors where joists have a minimum 90mm bearing. Alternatively, restraint should be provided by:

- restraint straps with a minimum 30mm x 5mm cross-section, or
- restraint type joist hangers to BS EN 845-1 with a performance equivalent to restraint straps.

Concrete floors

Adequate restraint can be provided by concrete floors that have a minimum 90mm bearing on to the wall. Alternatively, restraint should be provided by:

- restraint straps that are a minimum of 450mm long with the end turned down between a joint in the concrete floor or suitably fixed with screws.

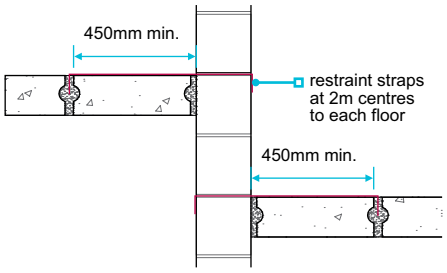

Masonry separating walls

Both leaves of a masonry cavity separating wall should be tied together to provide structural stability. The type of tie and spacing should limit the sound transmission across the cavity in accordance with building regulations.

Lintels and beams

Lintels should be specified according to loads and spans:

- in accordance with manufacturer's recommendations, or
- designed by an engineer in accordance with Technical Requirement R5.

For masonry:

- concrete and steel lintels are suitable
- timber lintels should not be used
- lintels should extend beyond the end of each opening in accordance with Table 2.

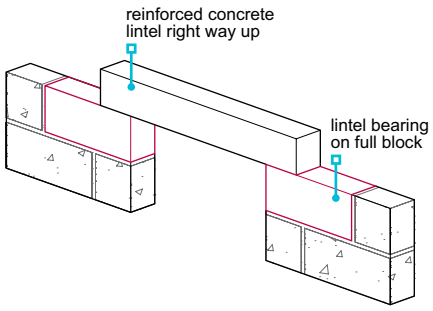

Table 2: Lintel bearings

Span (m)	Minimum length of bearing (mm)
Up to 1.2	100
Over 1.2	150

Lintels and beams should:

- have padstones where required
- be the correct way up
- bear on a full block, and be level and bedded on a solid bed of suitable mortar
- not have soft or non-durable packing.

6.3.5 Load-bearing timber walls

Also see: Chapter 2.1

Internal load-bearing timber walls shall be designed to support and transfer loads to foundations safely and without undue movement. Issues to be taken into account include:

a) structural elements
b) timber separating walls
c) timber quality.

Structural elements

Structural design of load-bearing timber walls should be in accordance with BS EN 1995-1-1.

When constructing structural elements:

- individual studs, sills and headplates should be 38mm x 75mm minimum, although larger sizes may be required to achieve an adequate level of fire resistance
- studs should be spaced at a maximum of 600mm centres
- lintel and cripple stud should be provided to each opening, except when the stud spacing is unaffected
- multiple joists should be supported by multiple studs
- framing joints should be secured with a minimum of two nails per joint
- where internal walls are made up from panels, structural continuity should be maintained, e.g. by the use of a continuous top binder.

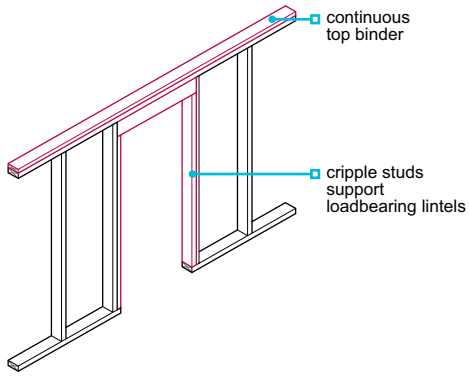

Timber separating walls

The type and spacing of wall ties and straps should limit sound transmission across the cavity in accordance with building regulations.

Wall ties should:

- be specified in accordance with the system designer's recommendations
- have a maximum cross-section of 40mm x 3mm
- be fixed below ceiling level
- be spaced a minimum of 1.2m horizontally.

Timber quality

Timber should be of the appropriate grade, moisture content and size to support the imposed loads.

Structural timber should be of a suitable grade and specified according to the strength classes in BS EN 338, e.g. C16 or C24. When graded to BS 4978:

- the species should be included in accordance with BS EN 1912 or the class strength specified
- BS EN 338 can be used to determine strength class.

Timber should have a maximum moisture content of 20%.

Structural softwood for internal use should be:

- dry graded to BS 4978
- marked 'DRY' or 'KD'.

Timber for walls which are to be dry-lined should be regularised and comply with BS 8212. Finger joints should comply with BS EN 15497.

6.3.6 Fire resistance

Also see: Chapter 6.2 and 8.1

Internal walls shall have adequate resistance to the spread of fire. Issues to be taken into account include:

a) fire resistance
b) typical construction
c) services
d) materials.

The guidance below does not apply to Scotland, and reference should be made to the Technical Handbooks.

Fire resistance

Internal walls should provide fire resistance in accordance with building regulations.

Typical construction

Internal walls of hollow or cavity construction (fire-resisting or otherwise) should have cavity barriers installed at:

- the perimeter
- junctions with fire-resisting floors and walls.

Fire-resisting walls should be fire stopped or constructed to resist fire spread at:

- their perimeter
- junctions with other fire-resisting walls, floors and roofs
- openings for doors and pipes, etc.

Where fire-resisting walls are of:

- masonry construction with a cavity, they should be closed at the top
- framed construction, they should have wire reinforced mineral wool cavity barriers at junctions with floors and ceilings.

At junctions between a separating or compartment wall and a pitched roof or flat roof:

- adequate precautions should be provided to prevent fire spread
- the separating wall should stop approximately 25mm below the top of adjacent roof trusses
- soft packing such as mineral wool should be installed above and below the roofing underlay to allow for movement in roof timbers to prevent 'hogging' of the tiles.

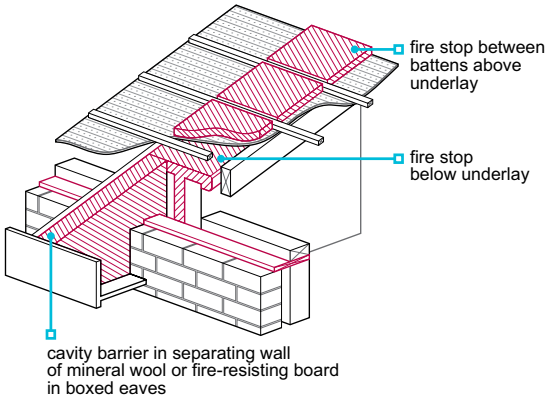

A wire reinforced mineral wool blanket cavity barrier should be provided within boxed eaves and be:

- a minimum 50mm thick
- carefully cut to shape to seal the boxed eaves fully
- fixed to the rafter.

The wall dividing an integral, or attached, garage and the floor above should be designed to act together to provide adequate resistance to fire spread. Where the garage has either no ceiling or there is no floor in the space above, vertical fire separation may be required.

For timber constructions, fire stopping material should be compressible, e.g. mineral wool, to accommodate timber shrinkage without affecting fire stopping.

Services

Where services such as pipes, cables and ducting pass through fire-resisting walls, penetrations should be fire stopped. Services should not penetrate plasterboard layers of separating walls.

Fire stopping should be:

- in accordance with building regulations and the design information
- completed neatly.

Materials

Suitable fire stopping materials include:

- mineral wool
- cement mortar
- gypsum plaster
- intumescent mastic or preformed strip
- proprietary sealing systems assessed in accordance with Technical Requirement R3.

6.3.7 Sound insulation

Also see: BS 8212

Walls shall be insulated with materials of suitable thickness and density to provide adequate resistance to the transmission of sound. Issues to be taken into account include:

a) sound-resisting construction

b) rooms which contain a WC.

Sound-resisting construction

Masonry separating walls

In England and Wales, separating walls may be built in accordance with Robust Details 'Resistance to the passage of sound'.

To maintain sound insulation:

- the correct blocks should be used
- fully fill joints, mortar beds and perpends
- use only approved wall ties
- space wall ties 900mm minimum horizontally and 450mm minimum vertically
- avoid any reduction in the thickness of masonry
- ensure spaces around joists are fully filled with masonry and pointed
- where external cavity walls have blown or pumped insulation, separating walls should be constructed with flexible cavity stops so that insulation cannot enter the cavity
- care should be taken when specifying dry lining, as the thickness of plasterboard layers, and the methods of sealing and fixing, can affect the transmission of sound
- holes, voids and hairline cracks should be avoided or made good, as they can significantly reduce the effectiveness of a sound-insulating wall.

In masonry separating cavity walls and where the cavity is up to 75mm, flexible wall ties should be:

- butterfly type ties, or
- tested to show compliance with building regulations.

Solid separating walls should be taken through the inner leaf of an external cavity wall and tied. Where the same blocks are used for both walls, tooth bonding is acceptable.

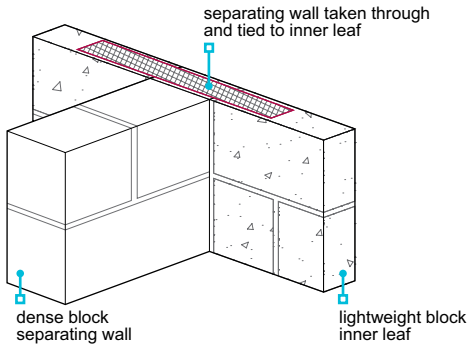

Chases can reduce the sound insulation value of a wall and should:

- be cut only where specified in the design
- not be cut using impact power tools where there is a risk of damage
- not exceed 1/6 of the thickness of the single leaf where horizontal
- not exceed 1/3 the thickness of the single leaf where vertical
- not be chased where hollow blocks are used, unless specifically permitted by the manufacturer
- be fully filled with mortar
- have positions of electrical socket outlets staggered on opposite sides of the wall.

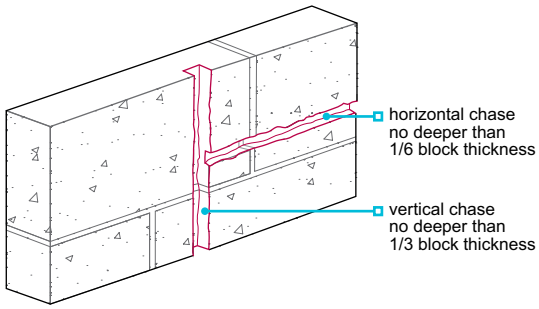

Separating walls of framed construction

Separating walls of framed construction should not have gaps in the:

- mineral wool quilt
- plasterboard layers
- fire stopping.

Flanking walls

The construction of the flanking wall and the position of openings should comply with building regulations.

Rooms containing a WC

The guidance below applies in Northern Ireland, Scotland and the Isle of Man. In England and Wales, the construction should comply with building regulations.

A minimum sound reduction of 38dB (100-3150Hz) when tested in accordance with BS EN ISO 140-4 is required between rooms that include a WC and:

- living rooms
- dining rooms
- studies
- bedrooms, except where the WC is ensuite.

Timber studwork

Timber studwork should be used with one of the following on each side:

- two layers of 12.5mm plasterboard
- one layer of 12.5mm plasterboard and 25mm mineral wool between the studs
- one layer of 9.5mm plasterboard, 5mm skim coat and 25mm of mineral wool between the studs
- one layer of 12.5mm panel board and 75mm of mineral wool between the studs.

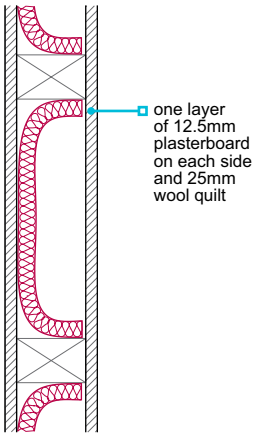

Other forms of studwork construction may be acceptable where the sound reduction is achieved and independent evidence of performance is available.

Where mineral wool quilt is used for acoustic insulation in partitions, it should be of a suitable thickness and density. Where two layers of plasterboard are used, joints should be staggered and properly filled.

Blockwork partitions

Masonry partitions provide adequate sound insulation without additional treatment where:

- blocks have a minimum density of 600kg/m^3 and are finished on both sides with 13mm of plaster, and
- blocks are tied at every course to adjoining walls, with joints fully filled.

Proprietary partitions

Independent test evidence of the system's performance is required in accordance with Technical Requirement R3.

6.3.8 Partitions: internal non load-bearing

Non load-bearing partitions shall have adequate strength and support.

The following constructions are acceptable:

- Masonry partitions.
- Timber partitions using 63mm x 38mm studs, sills and headplates with compatible spacing and plasterboard thickness.
- Steel partitions using studs, and head and base rails, from a minimum section of 43mm x 32mm x 0.45mm.
- Proprietary partitions in accordance with Technical Requirement R3.

Walls and partitions should:

- be appropriately supported
- not be supported by a floating floor which incorporates a compressible layer, unless the material is specifically manufactured for that purpose.

Masonry partitions should be supported on:

- foundations
- other masonry partitions or walls
- concrete floors
- steel or concrete beams, which may require padstones.

Masonry partitions should not be supported by timber joists or beams.

Where stud partitions or proprietary plasterboard partitions are supported by a timber floor, extra noggings or joists should be specified unless it can be shown that the deck can transfer the load without undue movement.

6.3.9 Construction of timber partitions

Also see: Chapter 9.2

Construction of timber stud internal walls shall ensure adequate stability, including:

a) setting out and workmanship
b) size of timber members
c) fixing.

Setting out and workmanship

Partitions should be:

- correctly positioned, square and plumb
- have studwork spaced at centres to suit the plasterboard thickness
- have extra studs at openings, as required.

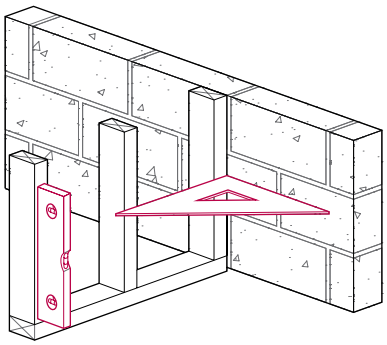

Size of timber members

Timber partitions should be constructed in accordance with the design information. Unless designed otherwise, the minimum specification for all partitions should be in accordance with Table 3.

Table 3: Timber sizes for partition walls

Component	Size
Sill and head plates	63mm x 38mm
Studs	63mm x 38mm at maximum 600mm centres
Blocking/nogging for support of plasterboard	43mm x 38mm
Blocking/nogging for other purposes	63mm x 38mm

Framing joints should be secured with two nails per joint.

Fixing

Partitions should:

- be firmly fixed to each other and to abutting walls; noggings or extra studs should be used where necessary
- be fixed to the structure where possible
- be fixed to noggings when parallel to structural elements
- not be over-wedged at floor level
- not be wedged against ceiling joists or roof trusses.

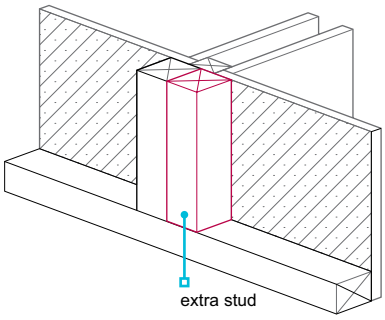

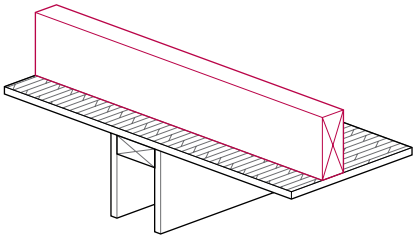

partition at right angles to joist – fixing to joist

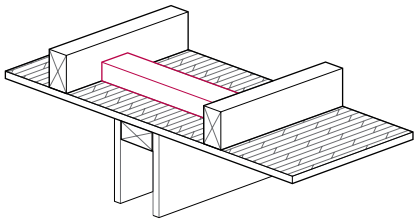

partition parallel to joist – fixing to nogging

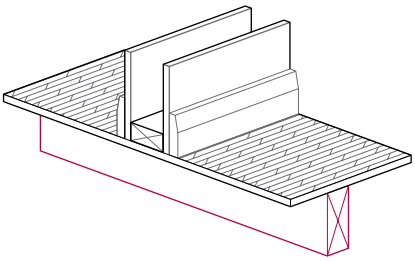

partition at right angles to joist – fixing to joist

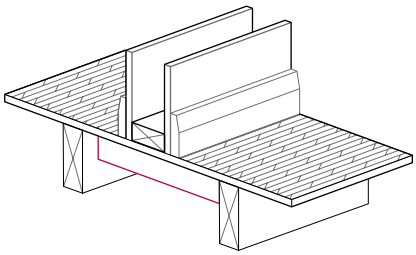

partition parallel to joist – fixing to nogging

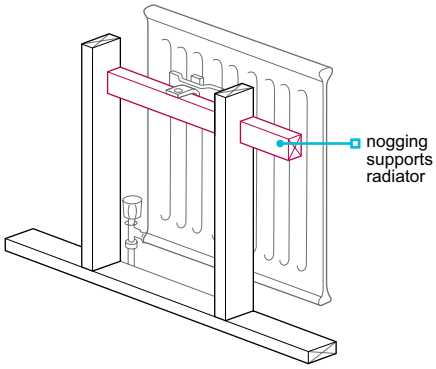

Noggings should be provided to support fittings, such as radiators, wall mounted boilers, sanitary fittings and kitchen units.

6.3.10 Construction of steel framed partitions

Non load-bearing steel framed walls shall be suitably constructed.

Noggings or straps should be provided as required to support fittings, such as radiators, wall-mounted boilers, sanitary fittings, kitchen units, etc. Non load-bearing partitions should not be wedged against floor joists, ceiling joists or roof trusses. Allowance should be made for the floor joists, ceiling joists or roof trusses to deflect so that the partition does not become load-bearing. They should be:

- constructed in accordance with the design
- correctly positioned, square and plumb
- supported on a structural floor, but not a floating floor that incorporates a compressible layer, unless specifically designed for that purpose
- fixed to the floor at the head, to each other and to abutting walls
- provided with extra studs at openings where required
- finished in accordance with Chapter 9.2 'Wall and ceiling finishes'.

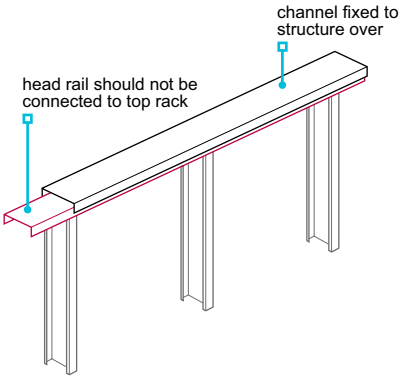

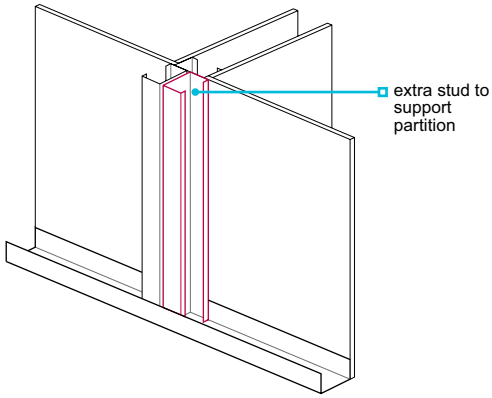

6.3.11 Construction of proprietary systems

Proprietary partition systems shall be suitable for their intended purpose and erected in accordance with the manufacturer's recommendations.

Proprietary partitions should be assessed in accordance with Technical Requirement R3, and:

- constructed and specified according to the manufacturer's recommendations, including construction sequence
- correctly positioned, square and plumb.

Timber or other additional fixings should be provided for radiators, electrical outlets, switches etc.

6.3.12 Plasterboard

Also see: Chapter 9.2

Plasterboard shall be of a suitable thickness for its intended use.

Dry lining should comply with BS 8212. Plasterboard should be to BS EN 520, and be:

- 9.5mm for stud spacing up to 450mm
- 12.5mm or thicker, for stud spacing up to 600mm.

For sound-resisting walls (e.g. separating walls and walls to WCs), the correct thickness, number of layers and sealing should be specified in the design information.

Tapered edge boards should be used where the plasterboard is to be jointed before decoration.

6.3.13 Damp-proof courses

Also see: Chapter 5.4

DPCs shall be installed where required to prevent moisture entering the building.

Load-bearing partition walls built on foundations should have a DPC. Where partitions which could be affected by residual damp (e.g. timber or steel) are placed on concrete floors, a DPC should be provided directly below, even where there is a DPM beneath the slab.

DPCs should be:

- at least the width of the wall or partition
- linked with any adjoining DPM
- continuous or lapped by a minimum of 100mm.

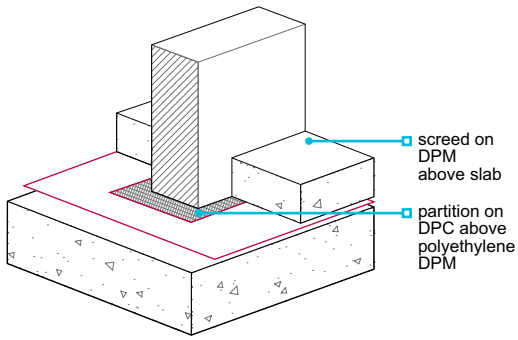

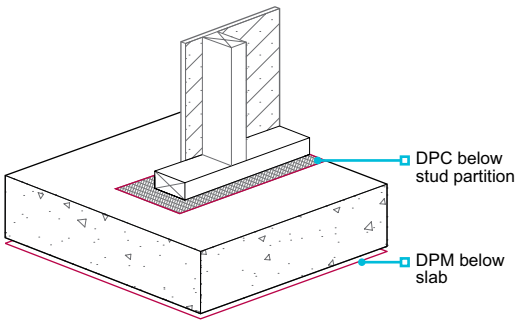

Where steps are necessary in the ground floor slab, a DPC should be:

- incorporated as a continuous link between the upper and lower DPCs
- protected from damage during construction.

Where steps are greater than 150mm, waterproofing should be provided in accordance with Chapter 5.4 'Waterproofing of basements and other below ground structures'.

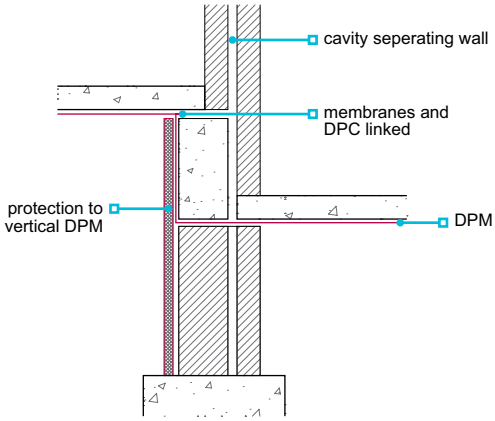

Materials acceptable for DPCs include:

Bitumen	BS 6398
Polyethylene	BS 6515
Proprietary materials	Technical Requirement R3

6.3.14 Components

Walls ties and related items shall be of the appropriate type and strength and shall have adequate durability.

Joist hangers, restraint straps, bond ties, etc. should be protected against corrosion. Ferrous metals with the following levels of protection are acceptable:

- Post-galvanizing to BS EN ISO 1461, or
- Pre-galvanizing to BS EN 10143.

Timber and concrete upper floors

CHAPTER 6.4

This chapter gives guidance on meeting the Technical Requirements for timber and concrete upper floors.

6.4.1	Compliance	01
6.4.2	Provision of information	01
6.4.3	Upper floor design	01
6.4.4	Fire spread	02
6.4.5	Sound insulation	02
6.4.6	In-situ concrete floors and concreting	03
6.4.7	Precast concrete	03
6.4.8	Timber joist spans	04
6.4.9	Timber joists	06
6.4.10	Construction of timber floors	06
6.4.11	Joists supported by intermediate walls	08
6.4.12	Joists connected to steel	08
6.4.13	Joists into hangers	09
6.4.14	Timber joist and restraint straps	10
6.4.15	Strutting	12
6.4.16	Joists and openings	12
6.4.17	Multiple joists	13
6.4.18	Notching and drilling	13
6.4.19	Floor decking	14
6.4.20	Floating floors or floors between homes	16

NHBC

Raising Standards. Protecting Homeowners

6.4.1 Compliance

Also see: Chapter 2.1

Timber and concrete upper floors shall comply with the Technical Requirements.

Timber and concrete upper floors that comply with the guidance in this chapter will generally be acceptable.

6.4.2 Provision of information

Designs and specifications shall be produced in a clearly understandable format, include all relevant information and be distributed to appropriate personnel.

Design and specification information should be issued to site supervisors, relevant specialist subcontractors and suppliers, and include the following information:

- Direction of floor span, and size and spacing of joists or concrete components.
- Size of trimmers and trimming joists.
- Position of strutting.
- Detailing of openings in the floor.
- Supporting walls below.
- Walls and partitions above.
- Positions of restraint straps.
- Positions of large service penetrations, e.g. chimneys, SVPs.
- Position of insulation.
- Details of all junctions.
- Manufacturers' recommendations for assembly and fixing of proprietary components.

6.4.3 Upper floor design

Also see: Chapter 9.5

Upper floors shall support and transmit loads safely to the supporting structure without undue deflection. Issues to be taken into account include:

a) loads and support to partitions

b) steelwork.

Loads and support to partitions

Structural design of timber and concrete upper floors should be in accordance with BS EN 1991-1-1.

The design of upper floors should account for dead loads, including:

- floor structure, decking and finishes
- ceilings and applied finishes
- walls and partitions supported by the floor
- permanent fixtures such as boilers,watertanks etc.

Imposed loads should be calculated in accordance with the relevant British Standards, including BS EN 1991-1-1 which recommends:

- 1.5kN/m^2 for self-contained homes
- values for communal areas serving flats or maisonettes.

Bearers or additional joists should be used to support heavy loads.

Joists built into separating walls may provide lateral support, and should be detailed to ensure that sound insulation and fire resistance requirements are met.

Masonry partitions

Where first floor masonry partitions cannot be built directly in line with ground floor masonry walls, steel or reinforced concrete support should be specified. Masonry should not be supported on joists.

Lightweight partitions

Where multiple solid timber joists support lightweight non load-bearing partitions which are parallel to the joists, they should be suitably fixed together. Where I-joists and metal web joists are used, they should:

- be positioned centrally below a non load-bearing partition and, where necessary, additional joists should be doubled or tripled in accordance with the manufacturer's recommendations
- support the weight of the non load-bearing partition by noggings or bearers fixed to the joists on either side. Unless designed otherwise, noggings should be a minimum 38mm x 90mm minimum at 600mm centres and fixed with metal clips. The sole plate of the non load-bearing partition should be fixed to the noggings, or
- be in accordance with the manufacturer's recommendations.

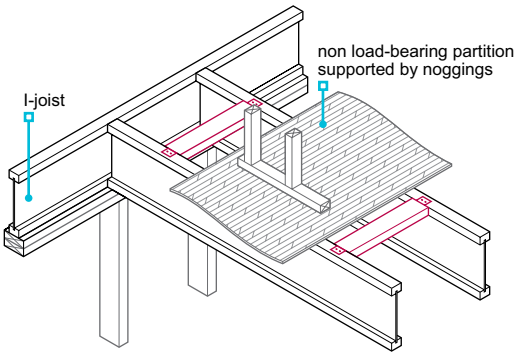

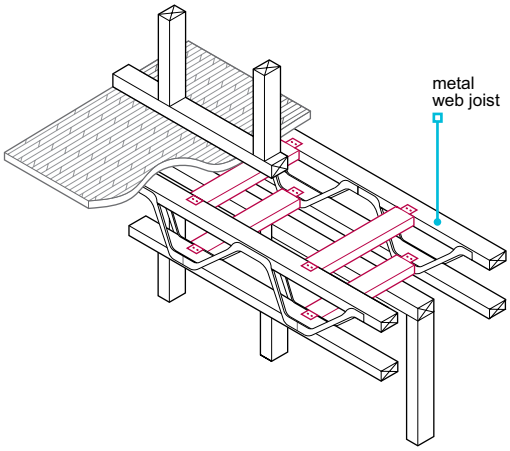

Steelwork

Steelwork should be:

- designed by an engineer in accordance with Technical Requirement R5 and comply with Chapter 6.5 'Steelwork'
- sized to allow an adequate joist bearing.

Structural continuity of the floor should be provided by the use of continuous decking fixed to joists on both sides of a transverse steel joist.

Steel beams should be protected by a suitably durable paint coating as detailed in Chapter 6.5 'Steelwork'.

6.4.4 Fire spread

Adequate fire resistance and fire stopping shall be provided by floors between homes and at penetrations. Upper floors shall be constructed to ensure structural timber is located away from heat sources.

Floors and ceilings should:

- comply with the relevant building regulations and Technical Requirement R3
- be in accordance with the design
- have adequate fire stopping
- should be able to resist the passage of smoke when the fire stopping has been installed.

Ceilings should not be perforated, e.g. for downlighters, unless it can be shown that the floor construction achieves the required fire resistance. Where downlighters are incorporated in a ceiling, they should be installed in accordance with the manufacturer's recommendations.

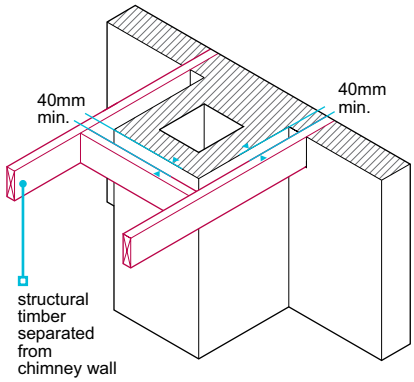

Timber

To counteract fire spread:

- combustible material should be kept away from heat sources
- structural timber should be separated from sources of heat in accordance with Chapter 6.8 'Fireplaces, chimneys and flues'.

6.4.5 Sound insulation

Upper floors shall be constructed to ensure that sound transmission is adequately limited.

Timber upper floors should comply with building regulations and Chapter 9.3 'Floor finishes'.

6.4.6 In-situ concrete floors and concreting

In-situ concrete upper floors shall be adequately reinforced and of a mix which is suitable for the location and intended use, and appropriately constructed.

Concrete floors should:

- comply with BS EN 1992-1-1 and Chapter 3.1 'Concrete and its reinforcement'
- comply with the design
- be reasonably level and smooth, especially at doorways and junctions
- be in accordance with Technical Requirement R3 where proprietary elements are used.

6.4.7 Precast concrete

Precast concrete upper floors shall be erected in accordance with the design.

Precast concrete flooring systems should be in accordance with BS EN 1992-1-1 or Technical Requirement R3.

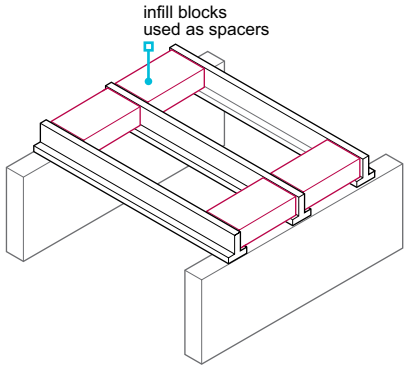

For precast concrete systems:

- details of manufacturer's assembly instructions and any independent certification should be available on site and followed
- beams, planks or infill blocks that are damaged should not be used
- adequate support should be provided until design strength is reached
- joints should be grouted in accordance with the manufacturer's recommendations.

Bearings should be:

- solid and level
- 90mm minimum on masonry (open frogs in brickwork should be filled)
- 75mm minimum on steelwork.

The setting out of beam and block floors should:

- ensure correct spacing between beams, using infill blocks as spacers
- be in accordance with the design
- allow for additional beams where required to support concentrated loads such as partitions.

Infill blocks should:

- be omitted or cut where necessary to allow for services
- be cut carefully and neatly without damage (not using a hammer and bolster).

Where floors rely on structural topping or in-situ make-up sections, propping may be needed until the in-situ concrete has reached design strength.

Trimmed openings

Where voids in precast concrete floors are to be trimmed:

- specifications and drawings should be followed
- steel trimmer shoes may be used.

Double beams, common around trimmed openings, should be adequately supported until all voids have been solidly concreted and the concrete has reached its design strength.

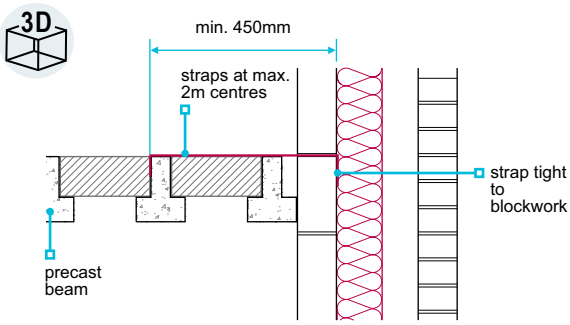

Restraint straps and ties

Straps:

- should be shown in the design
- are generally required where beams run parallel with the wall.

6.4.8 Timber joist spans

Timber floor joists shall be adequate for the spans and loads, and be correctly installed.

Solid timber joist sizes are provided in the BS 8103-3 span tables. Where the tables do not apply, or where there are concentrated loads, floor joists should be designed by an engineer in accordance with Technical Requirement R5.

Span tables for solid timber joists

Tables 1 and 2 in this chapter are derived from the TRADA Technology Ltd. 'Eurocode 5 span Tables for solid timber members in floors, ceilings and roofs for dwellings (3rd edition)'. The section sizes are based on regularised ALS or CLS timber.

For timber floors between homes:

- to meet acoustic performance, the dead load of the construction is likely to be 0.6-0.7kN/m^2
- use the three right-hand columns from Tables 1 and 2.

For upper floors with 22mm thick chipboard decking and a 12.5mm plasterboard ceiling:

- a dead load of between 0.25kN/m^2 and 0.5kN/m^2 may be assumed
- use the centre three columns from Tables 1 and 2.

Where lightweight non load-bearing partitions weigh up to 1.0kN (101.9kg) per metre run and are parallel to the joists, the following applies:

- Partitions may be directly supported by one or two additional joists.
- Partitions should be fixed through the floor decking into the joist(s) beneath.
- Where similar lightweight partitions run at right-angles to the joists, the maximum spans in Tables 1 and 2 should be reduced by 10%.
- For all other additional loads, joist sizes should be designed by an engineer in accordance with Technical Requirement R5.

Table 1: Permissible clear spans for domestic floor joists. Strength class C16

Imposed load not exceeding 1.5 kN/m².
Service class 1 or 2.

Dead load gk (kN/m²) excluding self-weight of joist										
Size of joist		gk not more than 0.25			gk not more than 0.50			gk not more than 1.25		
		Joist spacing (mm)								
		400	450	600	400	450	600	400	450	600
Breadth (mm)	Depth (mm)	Maximum clear span (m)								
38	97	1.76*	1.66*	1.43	1.64*	1.55*	1.35	1.43	1.35	0.71
38	120	2.36*	2.23*	1.94	2.18*	2.07*	1.80	1.86	1.77	**1.55**
38	145	2.85*	2.74*	2.48	2.68*	2.58*	2.32	2.33	2.22	**1.96**
38	170	3.33*	3.20*	**2.90**	3.14*	3.02*	**2.73**	2.74	**2.63**	**2.37**
38	195	3.81*	3.67*	**3.32**	3.59*	3.45*	**3.12**	**3.14**	**3.01**	**2.71**
38	220	**4.29***	**4.13***	**3.74**	**4.05***	**3.89***	**3.52**	**3.53**	**3.39**	**3.06**
44	97	1.89*	1.78*	1.54	1.76*	1.67*	1.45	1.53	1.45	1.27
44	120	2.48*	2.39*	2.08	2.33*	2.21*	1.94	1.98	1.88	1.66
44	145	2.99*	2.88*	2.61	2.82*	2.71*	2.45	2.46	2.36	**2.09**
44	170	3.50*	3.37*	3.05	3.30*	3.17*	2.87	2.88	2.77	**2.50**
44	195	4.00*	3.85*	**3.49**	3.78*	3.63*	**3.29**	**3.30**	**3.17**	**2.86**
44	220	4.51*	**4.33***	**3.94**	4.25*	**4.09***	**3.71**	**3.72**	**3.57**	**3.23**
47	97	1.95*	1.84*	1.60	1.81*	1.72*	1.50	1.57	1.49	1.31
47	120	2.54*	2.44*	2.15	2.39*	2.27*	2.00	2.04	1.94	1.71
47	145	3.06*	2.94*	2.67	2.88*	2.77*	2.51	2.52	2.42	2.15
47	170	3.58*	3.44*	3.12	3.37*	3.24*	2.94	2.95	2.83	**2.56**
47	195	4.09*	3.94*	**3.57**	3.86*	3.71*	**3.36**	3.38	**3.24**	**2.93**
47	220	4.60*	4.43*	**4.02**	4.34*	**4.18***	**3.79**	**3.80**	**3.65**	**3.30**
50	97	2.00*	1.89*	1.65	1.87*	1.77*	1.54	1.61	1.53	1.34
50	120	2.59*	2.49*	2.22	2.44*	2.34*	2.05	2.09	1.99	1.75
50	145	3.12*	3.00*	2.72	2.94*	2.83*	2.56	2.57	2.47	2.21
50	170	3.65*	3.51*	3.19	3.44*	3.31*	3.00	3.01	2.89	**2.61**
50	195	4.17*	4.02*	3.65	3.94*	3.79*	**3.44**	3.45	**3.31**	**3.00**
50	220	4.70*	4.52*	**4.11**	4.43*	4.26*	**3.87**	**3.88**	**3.73**	**3.38**
63	97	2.23*	2.11*	1.84	2.07*	1.97*	1.72	1.78	1.70	1.50
63	120	2.80*	2.69*	2.44	2.64*	2.54*	2.28	2.30	2.19	1.94
63	145	3.37*	3.24*	2.95	3.18*	3.06*	2.78	2.79	2.68	2.42
63	170	3.94*	3.79*	3.45	3.72*	3.58*	3.25	3.26	3.13	2.84
63	195	4.50*	4.33*	3.94	4.25*	4.09*	3.72	3.73	3.58	**3.25**
63	220	5.06*	4.87*	4.44	4.78*	4.60*	**4.18**	4.20	4.04	**3.66**
75	120	2.96*	2.85*	2.59	2.79*	2.69*	2.44	2.45	2.35	2.09
75	145	3.56*	3.43*	3.12	3.37*	3.24*	2.94	2.95	2.84	2.57
75	170	4.16*	4.01*	3.65	3.93*	3.79*	3.44	3.45	3.32	3.01
75	195	4.75*	4.58*	4.17	4.49*	4.33*	3.94	3.95	3.80	3.45
75	220	5.34*	5.15*	4.70	5.05*	4.87*	4.43	4.45	4.28	**3.88**
ALS/CLS										
38	140	2.75*	2.64*	2.39	2.59*	2.49*	2.21	2.24	2.13	**1.88**
38	184	3.60*	3.46*	**3.14**	3.39*	3.26*	**2.95**	**2.96**	**2.84**	**2.56**
38	235	**4.58***	**4.40***	**3.99**	**4.32***	**4.15***	**3.76**	**3.77**	**3.62**	**3.27**
89	184	4.74*	4.57*	4.17	4.48*	4.32*	3.94	3.95	3.80	3.45
89	235	5.99*	5.78*	5.29	5.68*	5.48*	5.00	5.01	4.83	**4.39**

* Two additional joists required
Bold text = normal bearing of 40mm to be doubled

Table 2: Permissible clear spans for domestic floor joists. Strength class C24

Imposed load not exceeding qk = 1.5 kN/m² or qk = 0.90 kN.
Service class 1 or 2.

Dead load gk (kN/m²) excluding self-weight of joist										
Size of joist		gk not more than 0.25			gk not more than 0.50			gk not more than 1.25		
		Joist spacing (mm)								
		400	450	600	400	450	600	400	450	600
Breadth (mm)	Depth (mm)	Maximum clear span (m)								
38	97	2.05*	1.94*	1.68	1.91*	1.80*	1.57	1.64	1.56	1.37
38	120	2.63*	2.53*	2.26	2.48*	2.38*	2.09	2.13	2.02	1.78
38	145	3.17*	3.05*	2.77	2.99*	2.87*	2.60	2.61	2.51	**2.25**
38	170	3.71*	3.57*	**3.24**	3.50*	3.36*	**3.05**	3.06	**2.94**	**2.65**
38	195	4.25*	4.08*	**3.71**	4.00*	**3.85***	**3.49**	**3.50**	**3.36**	**3.04**
38	220	**4.78***	**4.60***	**4.17**	**4.51***	**4.33***	**3.93**	**3.95**	**3.79**	**3.42**
44	97	2.19*	2.07*	1.81	2.04*	1.93*	1.69	1.75	1.66	1.46
44	120	2.77*	2.66*	2.41	2.61*	2.50*	2.24	2.26	2.15	1.90
44	145	3.33*	3.20*	2.91	3.14*	3.02*	2.74	2.75	2.64	2.38
44	170	3.90*	3.75*	3.40	3.67*	3.53*	3.20	3.22	3.09	**2.79**
44	195	4.46*	4.29*	**3.90**	4.21*	4.04*	**3.67**	**3.68**	**3.54**	**3.20**
44	220	5.01*	4.82*	**4.39**	4.73*	**4.55***	**4.13**	**4.15**	**3.98**	**3.61**
47	97	2.26*	2.14*	1.87	2.10*	1.99*	1.74	1.80	1.71	1.51
47	120	2.83*	2.72*	2.47	2.67*	2.56*	2.31	2.32	2.21	1.96
47	145	3.40*	3.27*	2.97	3.21*	3.09*	2.80	2.81	2.70	2.44
47	170	3.98*	3.83*	3.48	3.76*	3.61*	3.28	3.29	3.16	**2.86**
47	195	4.55*	4.38*	**3.98**	4.30*	4.13*	**3.75**	3.77	**3.62**	**3.27**
47	220	5.12*	4.93*	**4.48**	4.83*	**4.65***	**4.23**	**4.24**	**4.08**	**3.69**
50	97	2.32*	2.20*	1.92	2.15*	2.04*	1.79	1.85	1.76	1.55
50	120	2.88*	2.77*	2.52	2.72*	2.62*	2.37	2.38	2.27	2.01
50	145	3.48*	3.34*	3.04	3.28*	3.15*	2.86	2.87	2.76	2.50
50	170	4.06*	3.91*	3.55	3.83*	3.69*	3.35	3.36	3.23	**2.92**
50	195	4.64*	4.47*	4.07	4.38*	4.22*	**3.38**	3.85	**3.69**	**3.35**
50	220	5.22*	5.03*	**4.58**	4.93*	4.75*	**4.32**	**4.33**	**4.16**	**3.77**
63	97	2.52*	2.43*	2.14	2.38*	2.26*	1.99	2.03	1.94	1.72
63	120	3.11*	2.99*	2.72	2.94*	2.83*	2.57	2.57	2.47	2.22
63	145	3.74*	3.60*	3.28	3.54*	3.40*	3.09	3.10	2.98	2.70
63	170	4.37*	4.21*	3.84	4.13*	3.98*	3.62	3.63	3.49	3.17
63	195	5.00*	4.81*	4.39	4.72*	4.55*	4.14	4.15	4.00	**3.62**
63	220	5.61*	5.41*	4.94	5.31*	5.12*	**4.66**	4.68	4.50	**4.08**
75	120	3.29*	3.17*	2.88	3.11*	2.99*	2.72	2.73	2.62	2.38
75	145	3.96*	3.81*	3.48	3.74*	3.60*	3.28	3.29	3.16	2.87
75	170	4.62*	4.45*	4.06	4.37*	4.21*	3.83	3.85	3.70	3.36
75	195	5.27*	5.08*	4.64	4.99*	4.81*	4.38	4.40	4.23	3.85
75	220	5.92*	5.71*	5.22	5.61*	5.41*	4.93	4.95	4.76	**4.33**
ALS/CLS										
38	140	3.07*	2.95*	2.67	2.89*	2.77*	2.51	2.52	2.42	**2.15**
38	184	4.01*	3.86*	**3.50**	3.78*	3.63*	**3.29**	**3.31**	**3.17**	**2.87**
38	235	**5.10***	**4.90***	**4.46**	**4.81***	**4.62***	**4.20**	**4.21**	**4.04**	**3.65**
89	184	5.25*	5.07*	4.63	4.98*	4.80*	4.38	4.39	4.23	3.85
89	235	6.64*	6.41*	5.87	6.30*	6.08*	5.56	5.57	5.37	**4.89**

* Two additional joists required
Bold text = normal bearing of 40mm to be doubled

6.4.9 Timber joists

Also see: Chapter 3.3

Joists shall be of an appropriate size and quality, and be suitably durable.

I-joists and metal web joists should not be used in situations where any part of the joist is exposed to external conditions, and be:

- in accordance with Technical Requirement R3
- used in accordance with the manufacturer's recommendations
- protected from adverse weather conditions during transport and storage
- stored clear of the ground and stacked vertically
- not used where damaged.

Deflection and vibration limits should be:

- designed in accordance with BS EN 1995-1-1 and its UK National Annex, or
- specified using the following deflection limits based on total dead and imposed loads for combined bending and shear: 0.003 x the span, with a maximum deflection of 14mm where strutting is provided, or 12mm where strutting is not provided.

Structural solid timber joists should be specified according to the strength classes in BS EN 338, e.g. C16 or C24 and marked with:

- the strength class, or evidence of species and grade made available so as to determine the strength class
- the identification of the company responsible for the grading (when graded to BS 4978 or BS EN 14081).

When graded to BS 4978:

- the species should be included in accordance with BS EN 1912 or the class strength specified
- BS EN 338 can be used to determine strength class.

Regularised timber should be used for solid timber joists, and be:

- dry graded to BS 4978 or BS EN 14081
- marked 'DRY' or 'KD'.

Materials should be checked on delivery for conformity with the design.

Timber should be treated with preservative where it is to be built in or embedded into solid external walls.

Joists should be stored on bearers or in racks and be protected.

Timber should not be used where:

- it is excessively bowed, twisted or cambered
- it has large edge knots or shakes
- it has a waney edge more than half the thickness
- it is damaged or has any sign of rot.

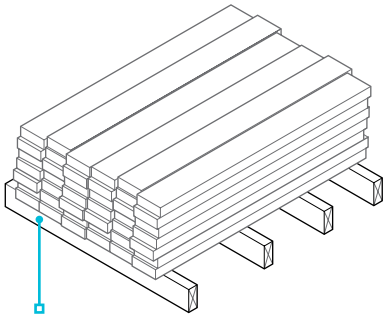

6.4.10 Construction of timber floors

Also see: Chapter 3.3

Upper floors shall be constructed in a workmanlike manner and provide satisfactory performance. Issues to be taken into account include:

a) levelling
b) joist spacing and clearance
c) support.

Levelling

Bearings for joists should be level. The floor should be levelled:

- from the staircase trimmer and trimming joist
- in accordance with the manufacturer's recommendations
- using hard packing; loose or soft packing should not be used.

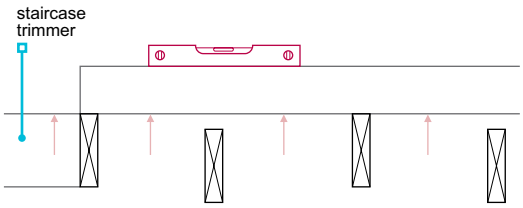

Joist spacing and clearance

Joist spacing should:

- be in accordance with the design and not increased
- account for the decking material to be used
- be a maximum of 600mm
- have a clearance of 25-75mm between the first joist and the wall face to aid the installation of services and the fixing of floor decking.

Support

The floor should have an adequate bearing on the supporting structure.

Timber joists should normally have a minimum bearing as shown in Table 3.

Table 3: Support of joists

Type of timber joist	Minimum bearing (mm)	
	End support	Intermediate support
Solid joist on masonry walls	90 (75)	90 (75)
Solid joist on timber wall plate	75	75
I-joist	90 (45)	90
Metal web joist	90 (75)	90

The figures in brackets should only be used when the joist is not providing restraint to the wall.

Joists may be:

- supported on joist hangers or on internal load-bearing walls
- built into the inner leaf of an external cavity wall, with care taken to ensure air-tightness.

Where joists are built into separating walls, fire-and sound-resisting performance, in accordance with building regulations, should be taken into account.

Solid timber joists

Where built into solid external walls, joists should be treated with preservative.

I-joists and metal web joists

I-joists and metal web joists should not be built into solid external walls.

The support reaction, due to dead and imposed loads on the floor, should not exceed the recommended value specified by the manufacturer.

Where there are concentrated loads:

- web stiffeners should be used for I-joists
- uprights between the flanges, held in place by punched metal plate fasteners or bottom chord (flange) support, should be used for metal web joists
- the manufacturer's recommendations should be followed.

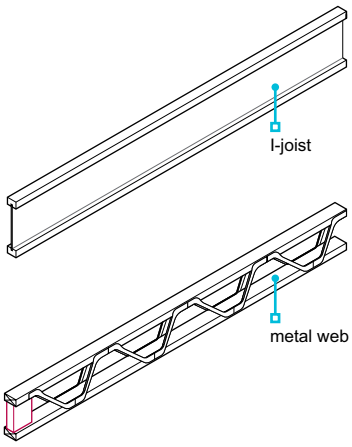

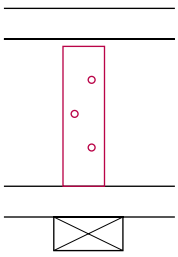

intermediate bearing

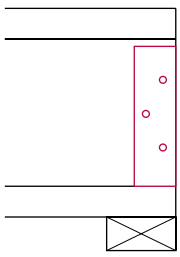

end bearing

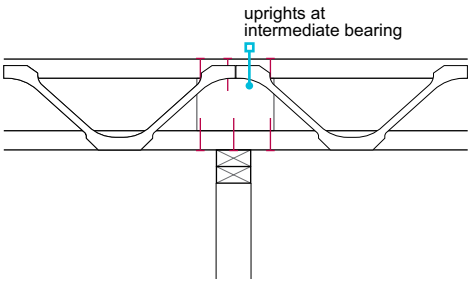

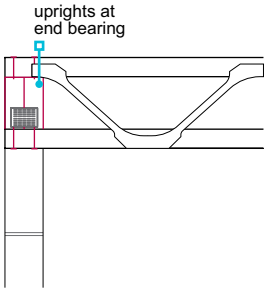

Where joists are supported on walls, noggings may be required at the top flange along the wall to support the floor decking, and at the bottom flange to support the plasterboard ceiling. Where joists are not built into brickwork or blockwork, blocking should be provided at the joist bearing. The blocking may be used for fixing plasterboard and floor decking.

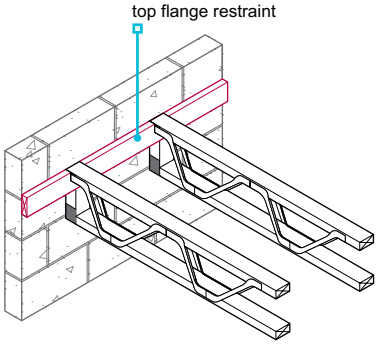

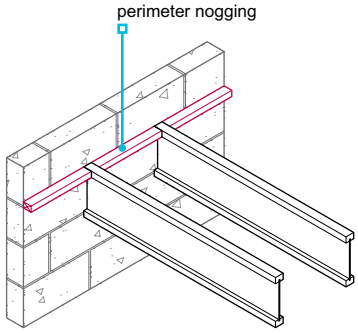

6.4.11 Joists supported by intermediate walls

Joists shall be properly fixed at intermediate load-bearing walls.

Solid timber joists

Solid timber joists bearing onto intermediate load-bearing walls should:

- be nailed together where they overlap
- not project more than 100mm.

I-joists

I-joists bearing onto intermediate load-bearing walls should have:

- blocking used to brace the butt joint
- short sections of joist used to provide lateral support.

Metal web joists

Metal web joists bearing onto intermediate load-bearing walls should:

- have a minimum 90mm bearing
- be overlapped.

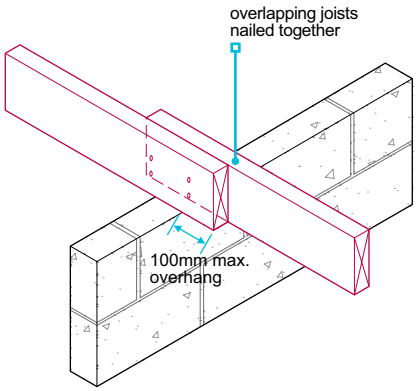

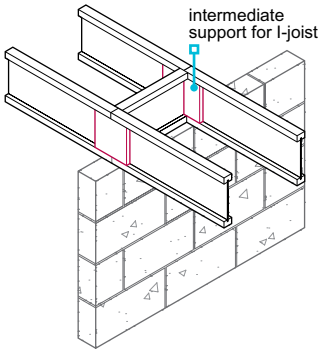

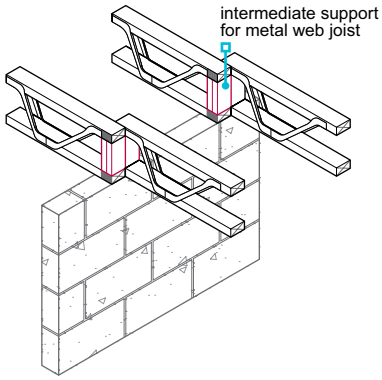

6.4.12 Joists connected to steel

Joists shall be suitably connected to steelwork.

Solid timber joists

Where connected to steel beams, solid timber joists should:

- be deep enough to be notched
- have 12mm top and 2mm bottom projections to allow for timber shrinkage
- be provided with strutting to prevent rotation.

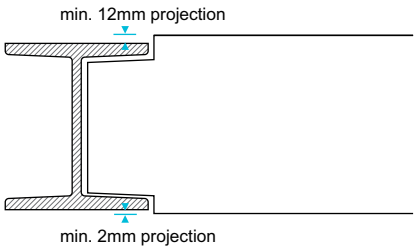

I-joists

Where connected to steel beams, I-joists should not be notched at the flange, and should:

- bear directly into the steel beam where the bearing is more than 45mm. Strutting, (noggings 38mm x thickness of flange) should be provided at the top and bottom flanges, or
- have blocking fixed to the steel beam to enable the I-joists to be face fixed using joist hangers. Strutting is not required when hangers the full depth of the joist are used to face fix joists to the blocking.

Metal web joists

Where connected to steel beams, metal web joists should not be notched at the flange, and should:

- bear directly into the bottom flange of the steel beam where the bearing is more than 75mm. There should be timber uprights between the flanges and 38mm x 97mm noggings between the uprights
- where the bearing is less than 75mm, the joist can be supported on the top flange with the bottom flange fixed to timber blocking supported inside the steel beam.

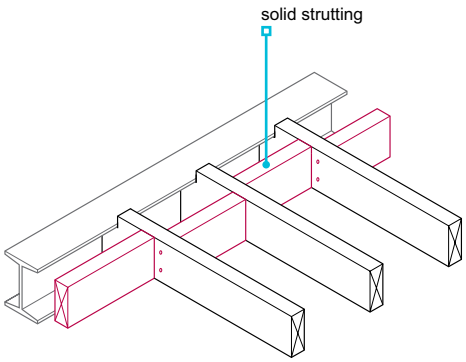

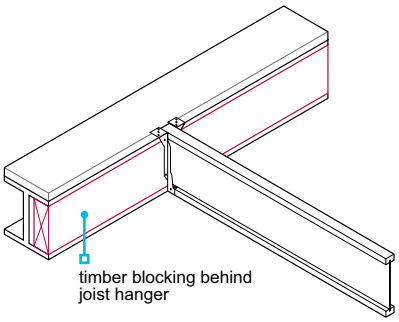

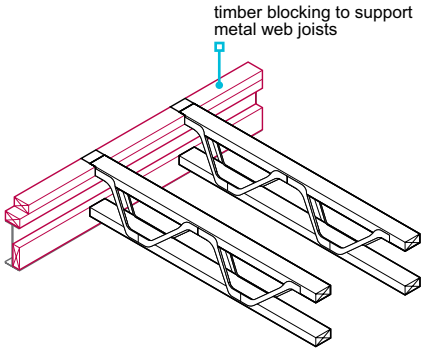

6.4.13 Joists into hangers

Joist hangers shall provide a suitable bearing on the supporting structure and be of an adequate size, strength and durability.

Masonry supporting joist hangers should be checked for level and height. The top flange loading on the joist hanger should not be greater than the strength of the supporting masonry. Where joist hangers are supported on lightweight blockwork, the suitability of the hanger should be checked. Joist hangers which meet BS EN 845-1 have a stamp indicating the minimum compressive strength of block for which they are suitable.

Hangers should:

- be detailed in the design, including the type of support to be used for joists, trimmers and trimming joists
- have a 75mm minimum bearing on masonry
- comply with BS EN 845-1 or comply with Technical Requirement R3
- have performance equivalent to restraint straps at 2m centres where required to provide restraint
- be the correct size for the joist or trimmer
- be nailed through each circular hole in the vertical sides
- bear on level beds and be tight to the wall
- not be cut into the walling.

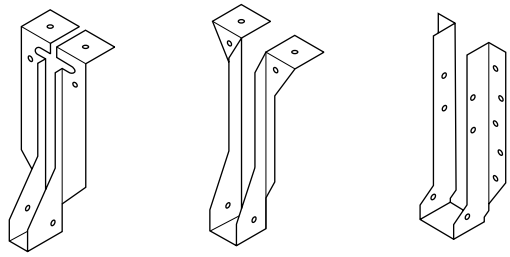

Joists should be accurately cut to length. Where joists are not built into brickwork or blockwork, blocking should be provided at the joist bearing. The blocking may be used for fixing plasterboard and floor decking.

Solid joists

Where connected to hangers, solid timber joists should:

- have a minimum bearing of 75mm onto the hanger
- be notched into the hanger to keep the ceiling line level
- be the full depth of the hanger.

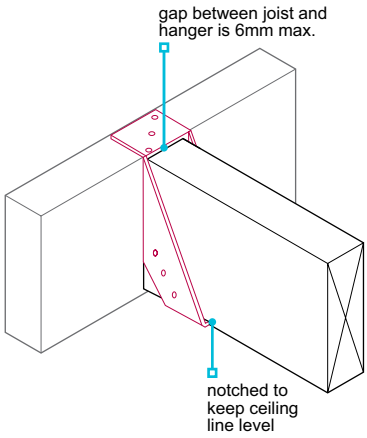

I-joists

Where connected to hangers, I-joists should not be notched at the flange, and should have:

- a minimum bearing of 45mm onto the hanger
- the tabs of the hanger bent and nailed to the bottom flange.

Hangers should be:

- the full depth of the joist and restrain the top flange, or
- at least 0.6 x the depth of the joist and have stiffeners (full depth) fixed to both sides of the web.

Metal web joists

Where connected to hangers, metal web joists should not be notched at the flange, and should have:

- a minimum bearing of 75mm onto the hanger
- timber uprights fixed between the flanges.

Hangers should be to the full depth of the joist and restrain the top flange, or another suitable means of restraining the top flange should be provided.

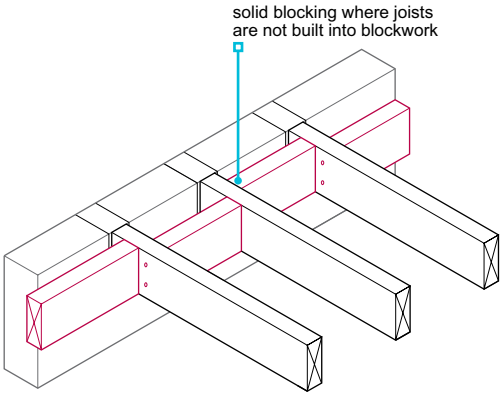

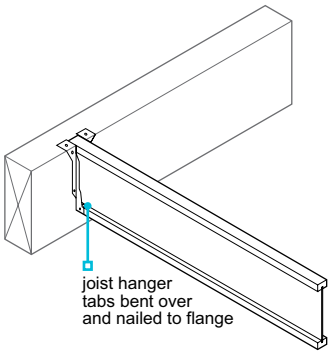

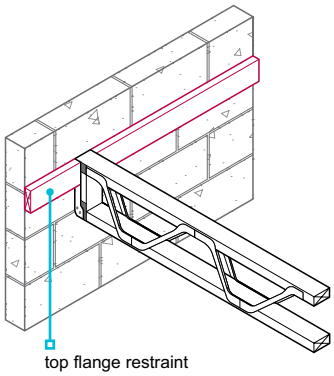

6.4.14 Timber joist and restraint straps

Also see: Chapter 6.1 and BS 8103-1

Upper floors shall provide adequate lateral restraint.

Restraint straps and joist hangers suitable for taking tensile forces may be required to tie walls and upper floors together or when the external wall is stabilised by a connection to the floor. Straps should:

- be detailed in the design, including the size, position and fixings
- be galvanised steel with a 30mm x 5mm cross-section or be in accordance with Technical Requirement R3
- have adequate packing between the wall and the first joist
- bear on the centre of bricks or blocks and not on mortar joints
- be fixed on the side, top or bottom, as appropriate to the joist type.

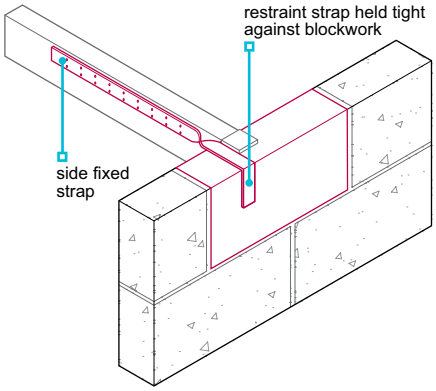

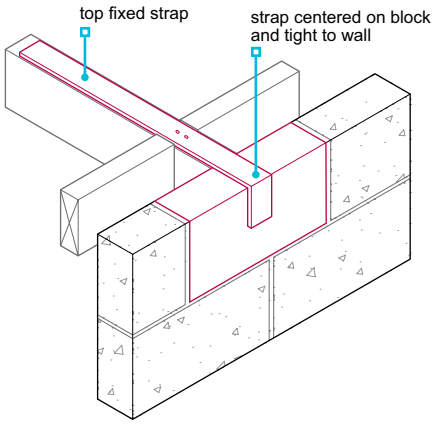

Restraint straps should be provided along the direction of the joists and spaced at a maximum of 2m centres. They are not generally required at the ends of joists in buildings up to, and including, two storeys where:

- restraint type joist hangers in accordance with Technical Requirement R3 are used, or
- joists are built into a wall and bear at least 90mm on the wall.

Where joists run parallel to the wall, straps should be fitted along the joists with a maximum spacing of 2m, and:

- be supported on noggings and extend over at least three joists
- be fixed with two screws or nails into each joist
- have noggings provided to receive two additional nails (for solid joists, two 4.76mm diameter x 50mm long wood screws (No.10) or 4mm diameter x 75mm round nails (8 SWG) can be used in each joist).

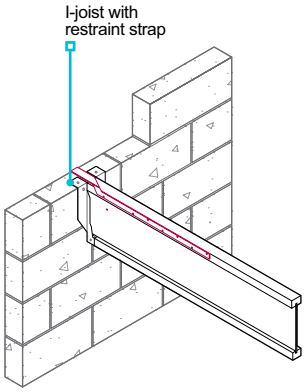

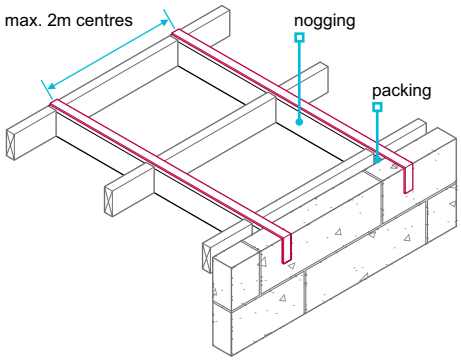

Solid timber joists

Solid timber joists should, have noggings provided at:

- a minimum of 0.5 x the depth of the member when straps are located on top of the joist, or
- the full depth of the member where straps are located beneath the joist.

I-joists

I-joists should not be notched and have:

- solid timber noggings no less than 0.5 x the depth of the member and a maximum of 150mm fixed between the webs and located beneath the top flange, when 30mm x 5mm galvanised straps are used, or
- noggings made from short lengths of I-joist, or solid timber the full depth of the I-joists, when proprietary straps are used.

When nailing into laminated veneer lumber flanges:

- care should be taken to prevent splitting
- nails should be driven in at an angle (not horizontally) and should not protrude from the flanges.

Metal web joists

Metal web joists should not be notched and should have:

- 35mm x 97mm solid timber noggings beneath the top flange of the metal web joists, and
- noggings nailed twice to each joist.

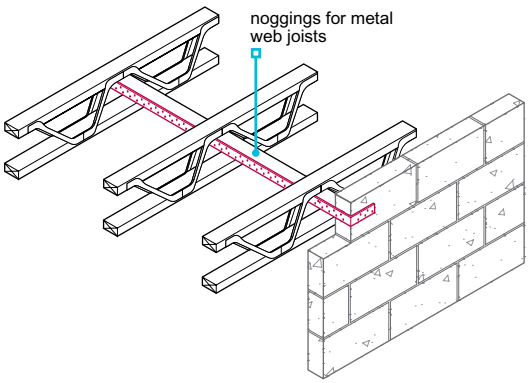

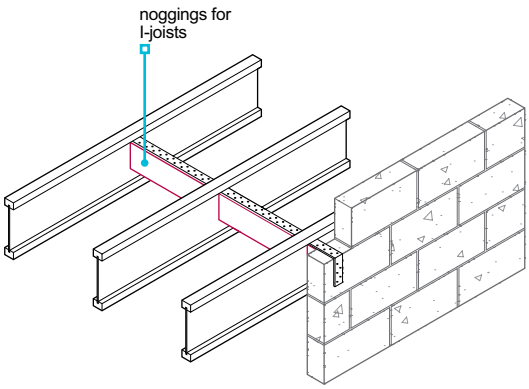

6.4.15 Strutting

Strutting shall be provided where required to distribute loads and ensure adequate rigidity of the floor structure.

Strutting should:

- not project beyond the top and bottom edges of joists
- be firmly blocked to the wall at the end of each run
- be provided before the deck is laid.

Proprietary metal strutting should comply with Technical Requirement R3.

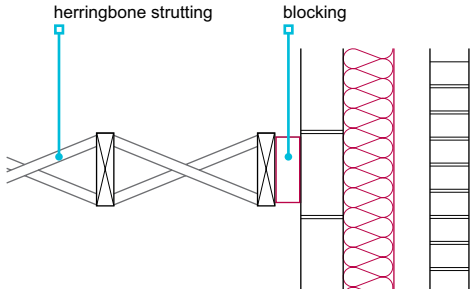

Solid timber joists

Strutting to solid timber joists should be:

- provided in accordance Table 4
- be herringbone (38mm x 38mm timber) or solid (minimum 38mm thick and 0.75 x the depth of the joist).

Table 4: Strutting for solid timber and I-joists

Joist span (m)	Rows of strutting
Under 2.5	None needed
2.5-4.5	1 (at centre of span)
Over 4.5	2 (at equal spacing)

I-joists

Strutting to I-joists should be:

- provided in accordance with the Table 4, where required.

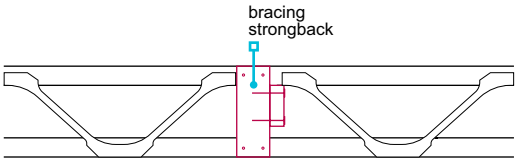

Metal web joists

Strutting to metal web joists should be:

- provided in accordance with Table 5
- solid timber 'strongback' bracing.

Table 5: Strutting for metal web joists

Joist span (m)	Rows of strutting
4-8	1 (at centre of span)
over 8	2 (at equal spacing)

6.4.16 Joists and openings

Also see: Chapter 6.6

Upper floors shall have adequately sized and properly supported trimmer joists around openings.

Trimmed and trimming joists should be:

- detailed in the design
- designed in accordance with Technical Requirement R5.

Connections between joists should be made with suitable 'timber-to-timber' hangers, and:

- where face fixing I-joists to another I-joist, be provided with backer blocks on both sides of the web of the trimmer
- where metal web joists are used as a trimming joist to support another metal web joist, have timber uprights between the flanges of the trimmer.

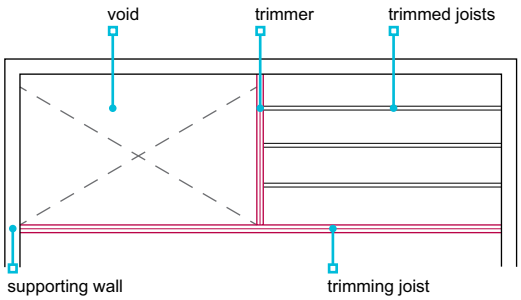

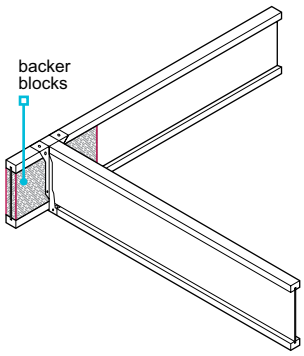

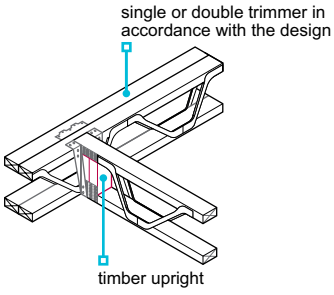

6.4.17 Multiple joists

Multiple joists shall be securely fixed together.

Joists can be doubled or tripled up to provide additional support, e.g. for lightweight partitions or to form trimmers. The design should specify how the joists are fixed together and be in accordance with manufacturer's recommendations.

When securing joists:

- fixings should be in accordance with the engineer's specification and should be checked before the ceiling is fixed, including the tightness of bolts
- toothed plate, split ring and shear plate connectors should be provided where required
- washers or single-faced connectors should be used with bolts
- ensure that timber is not damaged by over-tightening.

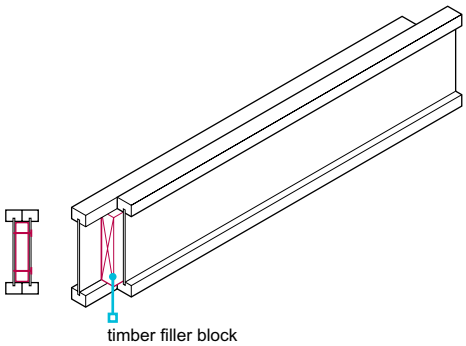

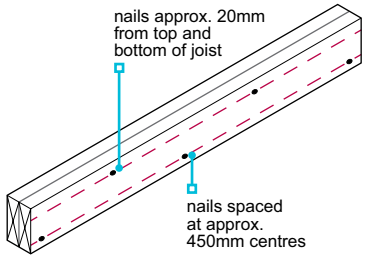

6.4.18 Notching and drilling

Notching and drilling shall be carried out within recognised limits.

Solid timber joists

Notching and drilling should be designed by an engineer where:

- the joist is deeper than 250mm
- it does not meet the guidelines in this chapter, or
- it is close to heavy loads, such as those from partitions, cisterns, cylinders and stair trimming.

Notching and drilling should:

- have a minimum horizontal separation of 100mm
- be in accordance with Table 6.

Table 6: Notching and drilling solid timber joists

	Location	Maximum size
Notching joists up to 250mm depth	Top edge 0.1-0.2 x span	0.15 x depth of joist
Drilling joists up to 250mm depth	Centre line 0.25-0.4 x span	0.25 x depth of joist

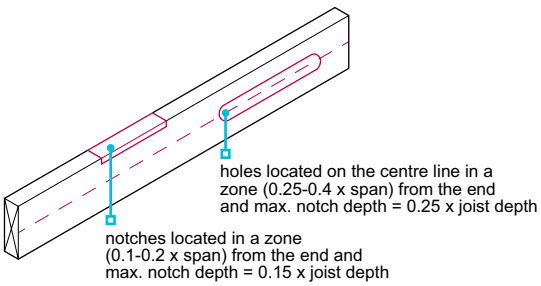

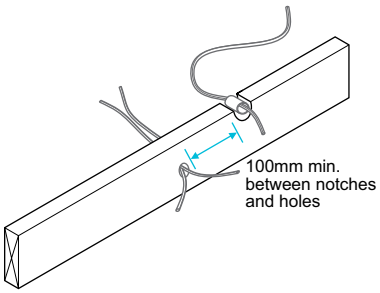

I-joists

Preformed holes should be provided in the web and:

- holes or notches should not be cut without the approval of the manufacturer
- restraint straps can be slotted into webs immediately below the top flange.

Metal web joists

In metal web joists:

- service conduits should run in the gaps between the metal webs
- maximum duct sizes should be in accordance with the manufacturer's recommendations
- large service ducts may have to be inserted before fixing the joists, as it may not be possible after the joists have been fixed.

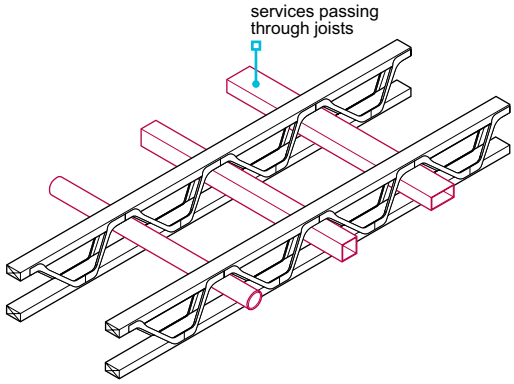

6.4.19 Floor decking

Floor decking shall be suitable for the intended use and be of adequate strength and moisture resistance. Issues to be taken into account include:

a) type, thickness and fixing

b) protection against damage.

Type, thickness and fixing

Where decking contributes to the sound insulation of a floor, the thicknesses listed in this chapter should be checked.

Floor decking should:

- be appropriate to the joist spacing
- be in accordance with Table 7 (which applies to normal domestic loads, i.e. an imposed load of 1.5kN/m^2), or comply with Technical Requirement R3.

Table 7: Floor decking requirements

Floor decking	400mm joist centres	450mm joist centres	600mm joist centres	Standard
Softwood boarding	16	16	19	BS EN 13353
Moisture resistant chipboard	18	18	22	BS EN 312 – type P5
Plywood	15	15	18/19	BS EN 636
Oriented strand board	15	15	18/19	BS EN 300 – type OSB3

When installing decking:

- fixings and support should be in accordance with the manufacturer's recommendations
- checks should be made, prior to fixing, to ensure that noggings, blocking and strutting are in the correct position and secure
- butt joints should be staggered and supported on noggings or joists
- adjacent boards should be square
- where nails are used, they should be 2.5 x the thickness of the decking material
- where gluing is required, boards should be glued to the joists and at joints, using a suitable polyvinyl acetate (PVAc) adhesive
- temporary wedges and packing should be removed once the floor decking is complete.

Square edged boards and boards with loose tongues

When fixing boards with square edges or loose tongues, they should be supported on all sides by joists or noggings.

Tongued and grooved boards

When fixing boards with tongued and grooved edges:

- boards should be laid with long edges at right angles to joists
- short edges should be supported on joists or noggings or cut back to form a butt joint over a joist
- boards should be glued to the joists and the sheets glued to each other with polyvinyl acetate (PVAc) adhesive (not softwood boarding)
- long edges at room perimeters should be fully supported on joists or noggings.

Chipboard flooring

Chipboard flooring should be supported and fixed in accordance with manufacturers' recommendations using either:

- flat-headed ring shank nails, 2.5 x the thickness of the board and minimum 3mm diameter, or
- screws to BS 1210, minimum 2 x the thickness of the board and no less than size No. 8.

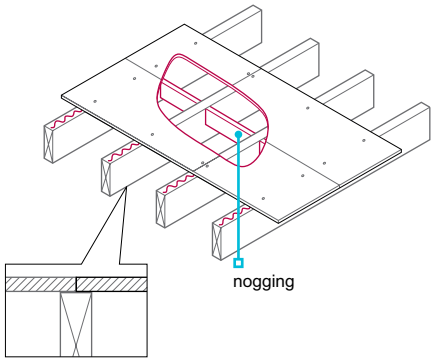

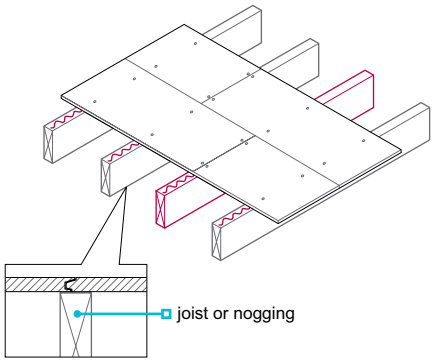

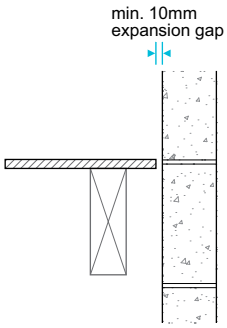

When fixing:

- fixings should have a maximum spacing of 300mm along continuously supported edges and intermediate supports
- where boards abut a rigid upstand, a minimum 10mm expansion gap should be provided; for large areas of boarded floor, a wider expansion gap may be required at upstands and intermediate expansion gaps of 2mm per linear metre of floor should be provided.

Oriented strand board flooring

When fixing oriented strand board flooring:

- boards should be laid over supports in the direction indicated on the board, with the stronger axis at right angles to the supporting joists
- boards should be long enough to span two joists
- nails should be flat headed, annular grooved nails, 3mm in diameter
- where boards abut a rigid upstand, a minimum 10mm expansion gap should be provided; for large areas of boarded floor, a wider expansion gap may be required at upstands and intermediate expansion gaps of 2mm per linear metre of floor should be provided.

Plywood flooring

When fixing plywood flooring:

- boards should be laid with the face grain at right angles to the supports
- end joints should occur over joists or noggings
- fixings should have a maximum spacing of 150mm around the perimeter and a maximum spacing of 300mm on intermediate supports
- an expansion gap of at least 1.5mm-2mm should be allowed between each panel.

Nails for fixing plywood should be in accordance with Table 8.

Table 8: Fixings for plywood floors

	Plain wire nails (mm)	Annular ring shank nails (mm)
Minimum diameter	3.35	3
Minimum length	65	50
Minimum penetration	40	32

Proprietary flooring

Proprietary flooring should be:

- in accordance with Technical Requirement R3
- installed in accordance with certification requirements.

Protection against damage

Floor decking should be stored:

- on a hard base
- under cover
- indoors where possible.

Where timber decking is to be installed before the home is watertight, the manufacturer should confirm suitability.

Floors should not be overloaded, especially with materials during construction, and be protected against damp, plaster splashes and other damage.

6.4.20 Floating floors or floors between homes

Floating floors shall be separated from the main structure and surrounding walls by a resilient layer.

The structural component of floors between homes may be concrete, steel, timber or a combination of these materials.

The floor finish should be isolated from walls and skirtings.

Where board materials are laid loose, joints in tongued and grooved boards should be glued.

Proprietary floating floor materials and systems should be fixed in accordance with:

- building regulations
- manufacturer's recommendations
- relevant certification requirements.

Steelwork

CHAPTER 6.5

This chapter gives guidance on meeting the Technical Requirements for:

- **steelwork which supports masonry partitions and timber floors, including trimmed openings**
- **the protection of steelwork.**

6.5.1	Compliance	01
6.5.2	Design guidance	01
6.5.3	Steel grade and coatings	03
6.5.4	Installation and support	05
6.5.5	Padstones	05
6.5.6	Connections	06
6.5.7	Examples	07

NHBC

Raising Standards. Protecting Homeowners

6.5.1 Compliance

Also see: Chapter 2.1

Steelwork shall comply with the Technical Requirements.

Steelwork (including trimming to floor voids) for supporting masonry partitions or timber floors which comply with the guidance in this chapter will generally be acceptable.

The information provided in this chapter is in accordance with BS EN 1993-1-1 using grade S275 steel; however, more economical or smaller beams may be designed by an engineer.

Steelwork, including its support and any connections, should be:

- designed by an engineer in accordance with Technical Requirement R5, or
- detailed in accordance with this chapter.

6.5.2 Design guidance

Also see: Chapters 6.1, 6.3 and 6.4

Steelwork shall be designed to support and transmit loads to the supporting structure without undue movement or deflection. Issues to be taken into account include:

a) support of masonry partitions

b) support of timber floors, including trimmed openings.

Support of masonry partitions

Masonry partitions may be supported by steelwork selected in accordance with this chapter. Care should be taken to avoid masonry supported by steelwork being partially supported or out of true.

Conditions for Tables 1 and 2

Steel beams in accordance with Tables 1 and 2 of this chapter will generally be acceptable for the support of masonry partitions where the following conditions are met:

- The partition is of one of the types detailed in Table 1.
- The partition is built centrally on the steelwork beam and is less than 2.7m in height.
- The span of the steel beam is less than 4m.
- Steel beams only support the weight of the partition and self-weight.
- Brickwork or blockwork (workface size 440mm x 215mm) supporting the steel beam has a minimum strength of 2.8N/mm^2 and the beam supports do not occur over a door or window opening.
- Padstones are provided where required, in accordance with Table 6.

Where any of the conditions are not met, steelwork should be designed in accordance with Technical Requirement R5.

Method of applying tables:

- Ensure that all conditions apply.
- Identify the masonry partition construction and thickness.
- Use Table 1 to establish the load per metre run.
- Check the span of the beam(s).
- Use Table 2 to determine a suitable steel section size.
- Use Table 6 to determine if padstones are required.

An example is provided at the end of this chapter.

Table 1: Load of partition to be supported

Type of masonry for supported partition (not more than 2.7m high and plastered both sides)	Maximum masonry density (kg/m^3)	Structural thickness (mm)		
		100	90	75
		Load (kN/m run)		
Dense masonry	2000	6.8	6.2	5.4
Medium masonry	1400	5.1	4.8	4.2
Lightweight masonry	800	3.5	3.3	2.9

Table 2: Size of steel beam supporting partition

Partition load (from Table 1) (kN/m run)	Clear span of beam (m)	Smallest suitable universal beam size (mm x mm x kg/m)
Less than 3	Up to 4 Over 4	127 x 76 x 13 (2)
3 to 5	Up to 3 3 to 3.5 3.5 to 4 Over 4	127 x 76 x 13 152 x 89 x 16 178 x 102 x 19 (2)
5 to 7	Up to 2.5 2.5 to 3 3 to 4 Over 4	127 x 76 x 13 152 x 89 x 16 178 x 102 x 19 (2)

Notes
1 For spans up to 4m, universal column 152mm x 152mm x 23kg/m (smallest size available) may be used.
2 For spans over 4m, beams should be designed by an engineer in accordance with Technical Requirement R5.

Support of timber floors, including trimmed openings

Timber floors may be supported by steelwork selected in accordance with this chapter and should include full allowance for the shrinkage of timber joists.

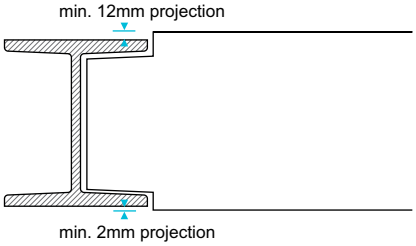

Conditions for Tables 3 and 7

Steel beams in accordance with Tables 3 and 7 will be acceptable to NHBC for the support of floors, where the following conditions are met:

- The floor construction is of decking (softwood boarding, chipboard, oriented strand board or plywood) on timber joists and the ceiling is plasterboard with a plaster skim coat or a plastic finish (Artex or similar).
- Allowance has been made of 0.5kN/m² for self-weight (floor and ceiling load).
- The floor does not support masonry partitions.
- Any lightweight partition, such as plasterboard on timber studwork or proprietary product, is non load-bearing.
- Padstones are provided where required in accordance with Table 6.
- Clear span of beam does not exceed 4.4m.
- Connections between steelwork beams are in accordance with Clause 6.5.6, or are designed by an engineer.
- The floor support is one of the methods shown in Figure 1.

Where any of the conditions are not met, steelwork should be designed by an engineer in accordance with Technical Requirement R5.

Method of applying tables:

- Use Figure 1 to determine the area supported by the beam(s).
- Check the span of the beam(s).
- Use Table 3 to determine a suitable steel section size.
- Use Table 7 to determine if padstones are required.
- Where steel beam-to-steel connections are required, refer to the connections in Clause 6.5.6.

Ensure that all conditions apply.

Figure 1: Effective areas supported by steel beams

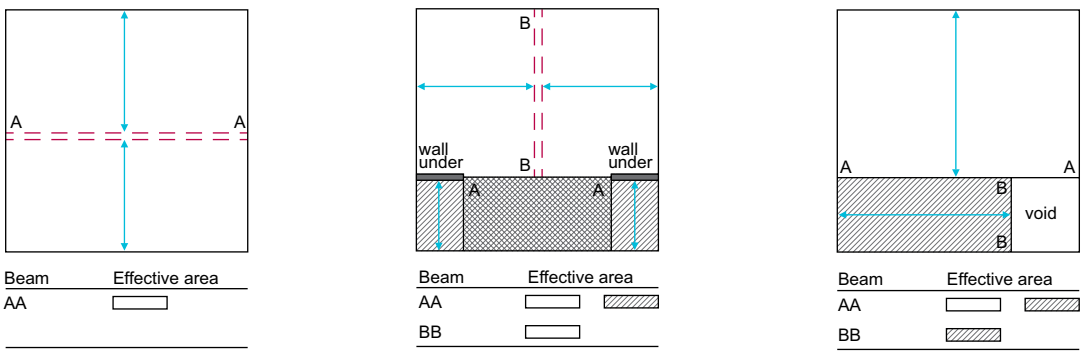

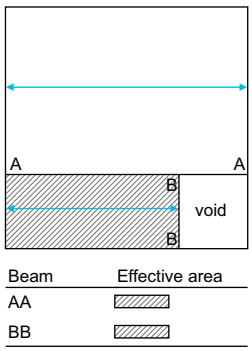

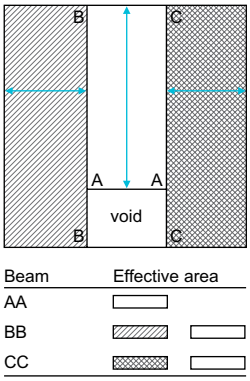

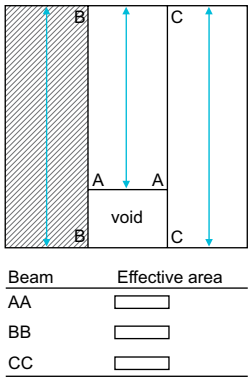

Where any area shown as 'void' contains a staircase, add 2m² to the effective area supported by any beam which fully or partially supports that staircase.

Table 3: Size of steel beam supporting timber floor

Effective area supported (m²)	Effective trimmer span = clear span + 100mm (m)	Smallest suitable steel section size (mm x mm x kg/m)	
		Universal beam	Universal column
0 to 20	0 to 2.0	127 x 76 x 13	152 x 152 x 23
0 to 20 20 to 30	2 to 2.5	127 x 76 x 13 152 x 89 x 16	152 x 152 x 23 152 x 152 x 23
0 to 10 10 to 20 20 to 30	2.5 to 3	127 x 76 x 13 152 x 89 x 16 178 x 102 x 19	152 x 152 x 23 152 x 152 x 23 152 x 152 x 23
0 to 10 10 to 30 30 to 40	3 to 3.5	127 x 76 x 13 178 x 102 x 19 203 x 133 x 25	152 x 152 x 23 152 x 152 x 23 152 x 152 x 30
0 to 10 10 to 20 20 to 30 30 to 40 40 to 50	3.5 to 4	152 x 89 x 16 178 x 102 x 19 203 x 102 x 23 203 x 102 x 30 *	152 x 152 x 23 152 x 152 x 23 152 x 152 x 23 152 x 152 x 30 152 x 152 x 37
0 to 10 10 to 20 20 to 30 30 to 40 40 to 50	4 to 4.5	203 x 102 x 23 203 x 133 x 25 203 x 133 x 30 * *	152 x 152 x 23 152 x 152 x 23 152 x 152 x 30 152 x 152 x 37 203 x 203 x 46

*Beams should be designed by an engineer in accordance with Technical Requirement R5.

6.5.3 Steel grade and coatings

Steelwork shall be specified to provide sufficient strength, durability, and fire resistance.

The design should detail the method of fixing or connecting structural steelwork. The guidance given in this chapter applies to steelwork which is to be bolted (using black bolts) or not connected.

Steelwork should be in accordance with the guidance in this chapter and:

- BS EN 10365 'Hot rolled steel channels, I and H sections. Dimensions and masses.' or
- BS EN 10056 'Structural steel equal and unequal leg angles'.

To ensure adequate durability in the environment it will be exposed to steelwork should:

- have a protective coating system applied before being delivered to site
- comply with the level of fire resistance required by building regulations.

Where welding is to be carried out, the protective coating system specified by the designer should be used.

Further guidance on the protection of structural steel is given in BS EN ISO 12944 'Paints and varnishes. Corrosion protection of steel structures by protective paint systems' and BS EN ISO 14713 'Zinc coatings. Guidelines and recommendations for the protection against corrosion of iron and steel in structures'.

Decorative finishes should be compatible with the protective coat specification. The designer should determine compatibility in accordance with the manufacturer's recommendations. Chapter 9.5 'Painting and decorating' contains further guidance for decorative paint finishes to steelwork.

Table 4: Environment categories for component groups in different locations and exposure conditions

Component group	Location	Description of exposure condition	Environment categories
External	Outside a home	Above splash zone	C4 or C5[1]
		At ground level within splash zone (up to 150mm above ground)	C5[2]
	Outside or basement	Below ground level	C5[2]
Internal	Sub-floor void[3]	Unventilated	C3
		Ventilated	C2
Internal	Kitchen/bathroom, etc.	Moist humid conditions – protected against condensation	C2
	Kitchen/bathroom, etc.	Moist humid conditions – exposed to condensation	C2
	Rooms other than kitchen/bathroom, etc.	Warm dry	C2
	In roof void	Unheated dry	C2
Internal/external	Façade	Embedded or partially embedded in building envelope	C5[4]

Notes
1 For construction located within 500m of coastal shoreline.
2 Alternatively, steelwork may be encased in concrete.
3 For steelwork not in contact with the ground.
4 For steelwork in contact with, or embedded in an external masonry wall, for at the contact / embedment length.

Alternatively, guidance on suitable atmospheric corrosivity categories (C1 – C5) and appropriate protective coatings for domestic construction may be based on the recommendations given on the website **www.steelconstruction.info**. A site specific assessment is required in order to determine an appropriate classification level for the steelwork. A suitable protective coating specification is to be determined by the designer in accordance with the coating manufacturer's recommendations.

Table 5: Protective coatings for hot rolled structural steelwork for atmospheric corrosivity category (recommended for housing applications only)

Atmospheric corrosivity and risk	Surface preparation[4]	Protective coating[1, 2, 3]			Site or factory applied	Making good of damaged areas of protective coating
		Material	Minimum coating thickness (d.f.t.)[5] / weight[6]	Number of coats		
C1 Very low	N/A	None required.	N/A	N/A	N/A	N/A
C2 Low	Thoroughly clean surface prior to abrasive blast cleaning to Sa 2½.	High build zinc phosphate epoxy primer[7]	80 µm[8]	1 or 2	Factory	Thoroughly wire brush damaged areas and build up coats using the same materials and to the same d.f.t.
C3 Medium	Thoroughly clean surface prior to abrasive blast cleaning to Sa 2½.	High build zinc phosphate epoxy [7] primer, followed by high build recoatable epoxy micaceous iron oxide (MIO)	80 µm[8] 120 µm (200 µm in total)	1 or 2 1	Factory	Thoroughly wire brush damaged areas and build up coats using the same materials and to the same d.f.t.
C4 High		Hot dip galvanize to BS EN ISO 1461[9]	460 gms/m²	1	Factory	To be determined by the designer in accordance with the manufacturer's recommendations.
C5 Very high		Hot dip galvanize to BS EN ISO 1461[9]	710 gms/m²	1	Factory	To be determined by the designer in accordance with the manufacturer's recommendations.

Notes
1 Where steelwork is to be given a decorative finish, the protective coat is to be compatible with the decorative finish. Manufacturers' recommendations should be followed.
2 Where steelwork is to be protected by intumescent paint for fire purposes, manufacturers' recommendations should be followed.
3 All fixings and fittings to the structural steel elements are to be protected against corrosion in a manner that is both commensurate and compatible with the protective coatings.
4 Surface preparation to BS EN ISO 12944-4.
5 Coating thicknesses given represent nominal dry film thickness (d.f.t.).
6 Thicknesses and weights shown represent the coating to be applied to each face of a steel section.
7 Epoxy primers have a limited time for over-coating. Manufacturers' recommendations should be followed.
8 80 µm can be in one coat or as 20 µm pre-fabrication primer plus 60 µm post-fabrication primer.
9 Alternatively, use products manufactured from austenitic stainless steel in accordance with the recommendations of BS EN 1993-1-4:2006.

Where shop-applied protective coatings have been damaged, the coatings should be made good on site prior to being built into the works, as indicated in Table 5 'Making good of damaged areas'.

Where steelwork is to be welded, the protective coating system specified by the designer should be used.

Where steelwork is to be protected by intumescent paint for fire purposes, this should be in accordance with the manufacturer's recommendations.

6.5.4 Installation and support

Steelwork shall be installed to achieve the required structural performance. Issues to be taken into account include:

a) section size and grade detailed in the design

b) steelwork support.

Section size and grade detailed in the design

When materials are delivered to site, they should be checked to ensure conformity with:

- engineer's design, or
- steelwork sizes in this chapter.

Steelwork support

Beam supports should not occur above window or door openings. Bearings for steelwork supported on masonry should be:

- 100mm minimum
- clean, dry and level.

6.5.5 Padstones

Steelwork shall be supported by padstones where required to distribute point loads safely to the supporting structure without undue movement or deflection.

Where a steel beam is supported by masonry, a padstone may be required to spread the load over a larger area to prevent overstressing. Padstones should be in accordance with:

- the engineer's design, or
- the guidance given in this chapter.

Where the inner leaf of the cavity wall contributes to the overall thermal performance of the wall, padstones should:

- have similar thermal properties to the masonry used for the rest of the inner leaf, or
- not create a cold bridge.

Table 6: Size of padstones (for steel supporting partition walls)

Type of masonry for supported partition (not more than 2.7m high and plastered both sides)	Thickness of wall supporting beam (mm)						Minimum depth of padstone (mm)
	100	125	140	150	190	215	
	Minimum length of padstone (mm)						
Dense masonry	215	190	185	180	165	155	150
Medium masonry	155	140	135	130	120	110	150
Lightweight masonry	95	85	80	75	70	70	150

Notes

1 Padstones are not necessary where the flange dimension of the beam exceeds the length of the padstone given in this table.

2 When steelwork is in line with the wall supporting it, i.e. when acting as a lintel over an opening:

- the flange dimension of the beam should not be more than 50mm greater than the thickness of the supporting wall
- the minimum length of padstone should be 200mm
- the padstone depth should match the coursing of adjacent masonry
- the web of the beam should be over the centre of the wall.

3 The minimum length of steel bearing onto padstone should be 100mm.

Table 7: Size of padstones (for steel supporting floors)

Effective area supported (as used in Table 3) (m^2)	Minimum padstone size (mm)					
	Thickness of wall supporting steel beam (mm)					
	Up to 105		105 to 155		156 to 216	
	Length	Depth	Length	Depth	Length	Depth
Up to 10	95	150	80	150	70	150
10 to 20	185	150	160	150	140	150
20 to 30	275	150	240	150	210	150
30 to 40	365	215	320	150	280	150
40 to 50	455	300	400	215	345	215

Notes
1 Padstones are not necessary where the flange dimension of the beam exceeds the length of the padstone given in this table.
2 When steelwork is in line with the wall supporting it, i.e. when acting as a lintel over an opening:
- the flange dimension of the beam should not be more than 50mm greater than the thickness of the supporting wall
- the minimum length of padstone should be 200mm
- the padstone depth should match the coursing of adjacent masonry, and
- the web of the beam should be over the centre of the wall.

Padstones should be formed in one unit with a minimum compressive strength of 10 N/mm² from:

- in-situ concrete
- precast concrete
- concrete blocks
- clay bricks, or
- engineering bricks (when less than 215mm x 100mm).

6.5.6 Connections

Connections shall be chosen and installed to achieve the required structural performance.

Steelwork connections should:

- be in accordance with the guidance in this chapter, or
- where other forms of connection (e.g. high strength friction grip bolts) are required, be designed by an engineer in accordance with Technical Requirement R5.

Only weld, cut or drill steelwork where it is required by the design.

Bolts for connections should comply with the design information and relevant British Standards, including:

BS 4190	'Specification for ISO metric black hexagon bolts, screws and nuts'.
BS EN 1011	'Welding. Recommendations for welding of metallic materials'.
BS EN 14399	'High-strength structural bolting assemblies for preloading'.
BS EN 1993-1-8	'Eurocode 3. Design of steel structures. Design of joints'.

The connection methods detailed in this chapter are suitable for connecting steel beams used to support floor loads only, using black bolts or welding.

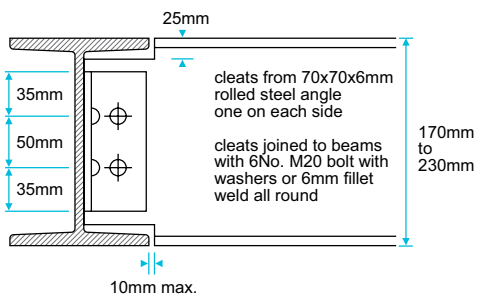

Joints between beams of similar size (beams 170mm to 2390mm deep)

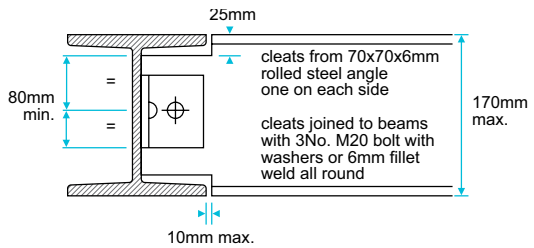

Joints between beams of similar size (neither beam deeper than 170mm)

Conditions for the use of this method are:

- beams should only support timber floors in accordance with this chapter
- both beams have been chosen from Table 3
- beams do not differ in depth by more than 40mm.

Connections between steel sections should be designed by an engineer in accordance with Technical Requirement R5, where the above conditions are not met.

6.5.7 Examples

1 Using information about the supported wall and Table 1:
   - load per metre run = 4.2kN/m

2 Using the load per metre run, the span of the beam and Table 2:
   - suitable section size = 178 x 102 x 19 UB

   152 x 152 x 23 UC is not suitable as it is too wide for the inner padstone/wall.

3 Using information about the wall supporting the beam (100mm thick), the walls supported by the beam (medium density block) and Table 6:

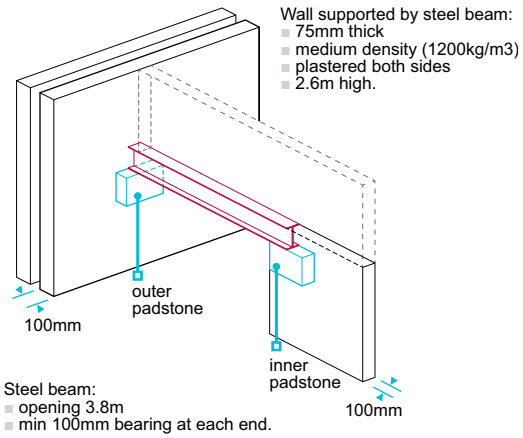

Results from example calculation:

Minimum padstone size	155mm long 150 mm deep
Outer padstone (beam at right angles to wall)	
Minimum length **Minimum depth** **Thickness**	155mm long(1) 150mm 100mm, to match blockwork(2)
Inner padstone (beam in line with the wall)	
Minimum length **Minimum depth** **Thickness**	200mm (see note 2 to Table 6) 150 mm 100mm, to match blockwork.

Notes

1 This is greater than the flange dimension of the steel section obtained in 2 above – 102mm – therefore a padstone is required to distribute the load.

2 The actual length and depth of a padstone could be greater to suit masonry coursing.

Staircases

CHAPTER 6.6

This chapter gives guidance on meeting the Technical Requirements for staircases.

6.6.1	Compliance	01
6.6.2	Provision of information	01
6.6.3	Fire precautions	01
6.6.4	Lighting	02
6.6.5	Glazing	02
6.6.6	Structural design	02
6.6.7	Headroom and width	03
6.6.8	Design of steps	03
6.6.9	Landings	04
6.6.10	Guarding	05
6.6.11	Handrails	05
6.6.12	Staircases made from timber and wood-based products	07
6.6.13	Concrete staircases	08
6.6.14	Steel staircases	08
6.6.15	Proprietary staircase units	08
6.6.16	Protection	08

NHBC

Raising Standards. Protecting Homeowners

Definitions for this chapter

Balustrading	The collective name for the complete assembly of handrails, baserails, newels, spindles and caps.
Common (communal) stair	A staircase serving more than one property.
Continuous handrail	Using lengths of handrail connected to handrail fittings and ramps, the handrail flows over the tops of newel turnings, creating a continuous run of handrail.
Going	The horizontal distance between the face of the first and last risers.
General access stair	A stair intended for all users of a building on a day-to-day basis, as a normal route between levels.
Newel post	A post at the head or foot of a flight of stairs, supporting a handrail.
Nosing	The edge of the tread projecting beyond the face of the riser.
Pitch	The angle between the pitch line and the horizontal.
Pitch line	A notional line connecting the nosings of all treads in a flight of stairs.
Private stair	A staircase wholly within one dwelling.
Rise	The vertical distance between the floors or landings connected by a flight. The individual rise is the vertical measurement from the top of a tread to the top of the next tread.
Riser	The board that forms the face of the step.
Spindle	A vertical member, plain or decorative, that acts as the infill between the handrail and baserail.
Staircase	The entire structure relating to a stair, comprising steps, treads, risers, strings, balustrading, landings, etc.
Stairway	The space/void provided for the stairs.
Step	The tread and riser combined.
Tread	The top or horizontal surface of a step.
Utility stair	A staircase used for escape, access for maintenance, or purposes other than moving between levels on a day-to-day basis.
Winders	Radiating steps, narrower at one end, that are used to change the direction of stairs through 90° or 180°.

6.6.1 Compliance

Also see: Chapter 2.1

Staircases shall comply with the Technical Requirements.

Staircases which comply with the guidance in this chapter will generally be acceptable. Further guidance can be found in BS 5395-1.

6.6.2 Provision of information

Designs and specifications shall be produced in a clearly understandable format, include all relevant information and be distributed to appropriate personnel.

Design and specification information should be issued to site supervisors, relevant specialist subcontractors and suppliers, and include the following information:

- layout of stairs and position of handrails
- dimensions covering width, rise and going, handrail height, etc.
- the type, size and length of fixings, their location and number, and the type of wall and joists/trimmers the stair is being secured to.

6.6.3 Fire precautions

Where required for fire escape, staircases shall be suitably designed.

Staircases should be designed to meet relevant building regulations, taking into account the fire resistance of components and smoke ventilation. Further guidance can be found in BS 9991 and BS 9999.

Timber staircases are acceptable in a single family home where there are no more than four storeys, excluding the basement.

In houses of three or more storeys, and flats in buildings of three or more storeys, additional provisions may be required to comply with relevant building regulations.

Further information on fire precaution and staircases can be found in the Building Control Alliance Technical Guidance Note 19.

6.6.4 Lighting

Also see: Chapter 8.1

Staircases shall be adequately lit.

Artificial light sources should be provided to all staircases and landings within homes and common areas, and be controlled by two-way switching. Alternatively automatic light-sensitive controls may be used.

6.6.5 Glazing

Also see: GGF Safety and Security Glazing Good Practice Guide

Glazing near staircases (where contact could be made by someone using the stairs) shall be suitable for its location.

Where staircases are located close to glazing, any glass below the minimum guarding height or within a zone where a user may make impact, the glass should either not break or be designed to break safely. The glazing should be at least one of the following:

- protected by a balustrade or railing (balustrade spacing should be a maximum of 75mm)
- toughened or laminated glass
- constructed using glass blocks.

6.6.6 Structural design

Staircases shall be properly supported and transmit loads to the supporting structure without undue movement, deflection or deformation.

Staircases should be designed and comply with building regulations and Table 1.

Table 1: Standards for stair construction

Type of staircase	Relevant standard
Timber staircases (straight flights, ¼ or ½ landings)	BS 585: Part 1 or 2. The method of fixing flights to the surrounding structure should be specified.
Reinforced concrete staircases	BS EN 1992-1-1 and Chapter 3.1 'Concrete and its reinforcement' Should be designed by an engineer in accordance with Technical Requirement R5.
Steel staircases	BS EN 1993-1-1.
Proprietary staircases	Technical Requirement R3.

Timber stud walls may require additional noggings to provide appropriate fixing locations, and block walls should be sufficiently robust to support the required loads and to receive appropriate fixings. It should be noted that stairs generally are unable to be secured to metal stud walls.

Differential movement

When considering differential movement in relation to setting out, levels and finishes, allowances should be made for:

- casting tolerances
- deflection under load
- foundation settlement
- creep and shrinkage
- storey height.

6.6.7 Headroom and width

Staircase openings shall be adequately sized.

Stairs should have a minimum of 2m clear head room (H) over the entire length and width of the stairway and landing, as measured vertically from the pitch line or landing.

The overall floor opening should be checked off plan and on site prior to the stairs being installed:

- for size to accept the stairs, with sufficient clearance to enable installation
- to allow for sufficient headroom.

Where staircases form part of a means of escape, reference should be made to the relevant building regulations.

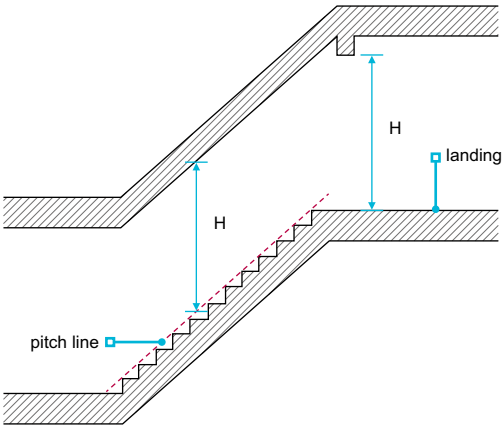

6.6.8 Design of steps

Also see: BS 5395

Steps shall be constructed to allow the safe use of the staircase. Issues to be taken into account include:

a) pitch
b) steps
c) tapered treads and winders.

Pitch

The maximum angle of pitch of a stairway should not exceed:

- 42° for private stairs

The dimensions for maximum rise and minimum going should meet national building regulations.

Private stairs should have a maximum rise 220mm and minimum going 220mm.

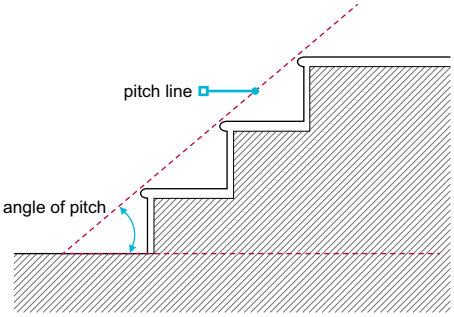

Staircases should be accurately located and fixed with the string at the correct angle to ensure all treads are level.

Stairs should be dimensioned so that the rise (R) and the going (G) is between 550mm and 700mm when using the equation: 2R + G.

Steps

In each flight:

- treads should be level
- the rise and going of steps should be equal
- account should be taken of the thicknesses of screeds. Floor finishes that reduce the bottom rise by a maximum of 12mm are acceptable
- the treads should overlap by a minimum of 16mm, where the riser is open
- open risers should not have gaps greater than 100mm and are not permitted for common stairs.

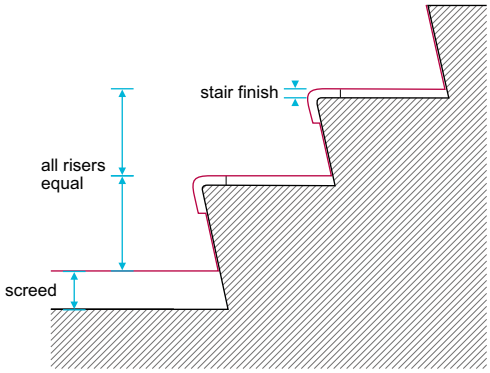

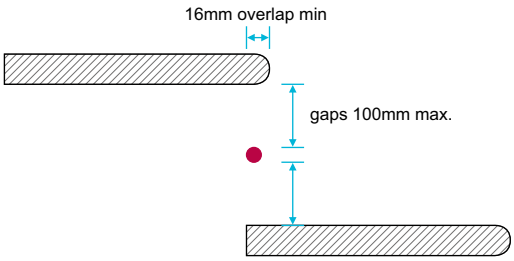

Where stairs are open to the weather, designers should consider that grip may be affected by water or dust, and one of the following should be specified:

- a non-slip finish
- a non-slip insert to each tread.

Tapered treads and winders

The rise of tapered treads should be consistent throughout the staircase. The going should be:

- uniform and no less than the going of the associated straight flight, measured from the centre line of the straight flight
- a minimum of 50mm at the narrowest point.

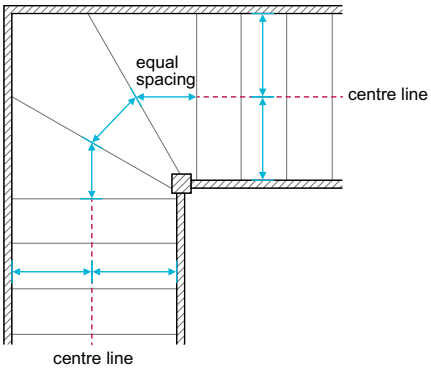

6.6.9 Landings

Landings shall allow safe use of the staircase.

Landings should be:

- provided at the top and bottom of every flight
- level and at least the same depth and width as the width of the stair.

Door swings should not obstruct landings. A door may open across the bottom landing of private stairs where the swing is a minimum of 400mm from the first tread.

Pivot windows should not obstruct the landing area or stair flight when they are opened.

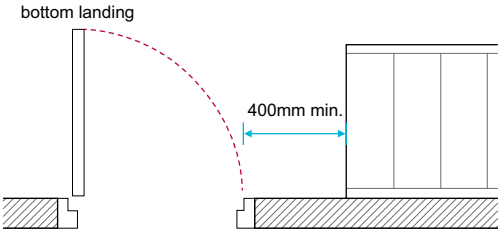

6.6.10 Guarding

Staircases shall have adequate guarding and be constructed to reduce the risk of being climbed or falling through.

Guarding:

- is required where the drop is more than 600mm at any point along the open sides of stairs and landings
- may be required where a stair abuts an opening window, to comply with relevant building regulations.

Guarding should be:

- provided along the full length of the flight, including landings
- capable of resisting a horizontal force of 0.36kN/m at its minimum required height, in accordance with BS 6180
- a solid wall or balustrading
- in accordance with Table 2.

Table 2: Guarding height

Type of stairs	Flights – minimum guarding height (mm)	Landings – minimum guarding height (mm)
Private stairs (England, Wales, Northern Ireland and the Isle of Man)	900	900
Private stairs (Scotland)	840–1000	900
Common stairs	900	1100

Balustrading should:

- be fixed securely
- not be climbed easily by children, e.g. have no horizontal foot holds which would enable climbing
- not have openings larger than 100mm in diameter.

Where guardrails or balustrades are long, newel posts may not be sufficient to transfer the horizontal forces to the structure, and intermediate posts may be required. The method of fixing newels should be specified, e.g. through-bolted to joists.

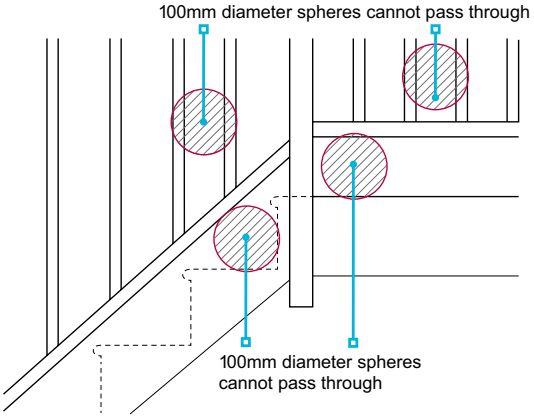

6.6.11 Handrails

Also see: BS 5395-1

Handrails shall be correctly located and fixed to provide a firm handhold.

A handrail is required for flights of stairs that rise over 600mm. The handrail (throughout the full length) should:

- be securely fixed and located in accordance with the design
- be a vertical distance of 900mm–1000mm (or 840mm–1000mm in Scotland) above the pitch line
- have a 25mm minimum clearance from any surface
- ensure a firm handhold
- have rounded ends or be returned to the wall to reduce the risk of clothing being caught
- be continuous, smooth and unobstructed.

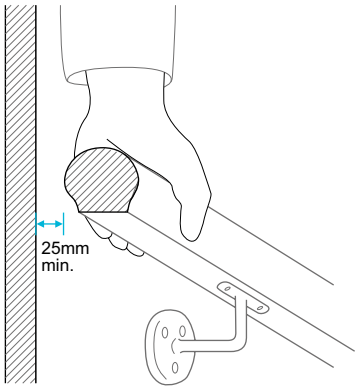

For tapered treads/winders, the handrails to the outside of the stairs should provide a safe handhold for the full rise of any stairs with a total rise greater than 600mm.

In England, Wales and Scotland, where the staircase has between one and four tapered treads/winders, the newel post may be used to provide a safe handhold. In Northern Ireland, a handrail should be fitted to the outside of all tapered stairs.

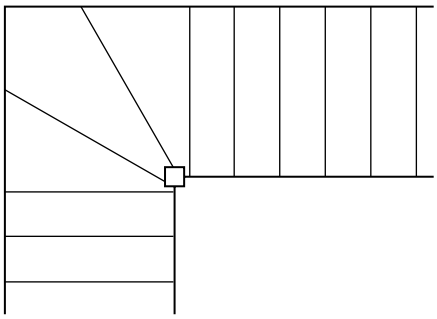

additional handrail not needed

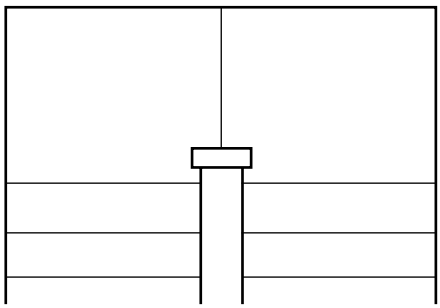

additional handrail not needed

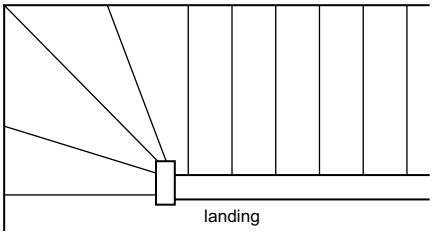

additional handrail not needed where a split newel provides a hand hold

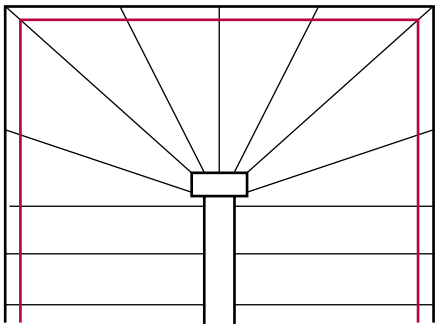

additional handrail needed

In England, Wales and Scotland, a handrail is not required on the outside of the stairs if the newels provide a safe handhold.

There should be a minimum distance between newels of 100mm to provide a hand grip.

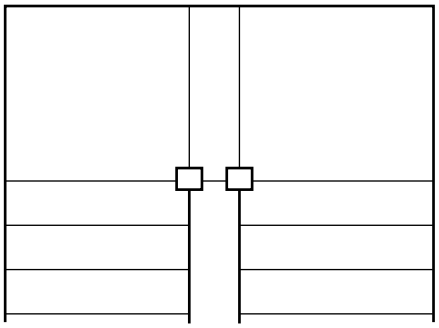

additional handrail not needed

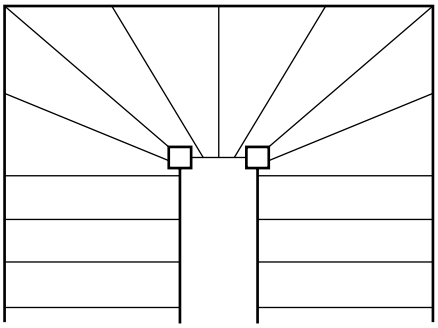

additional handrail not needed

Where a handrail is needed, it should be continuous for the whole rise to avoid the need to change hands. At corners, the handrails do not need to join if they extend into the corner and provision is made for an easy transfer of a handhold from one handrail to another.

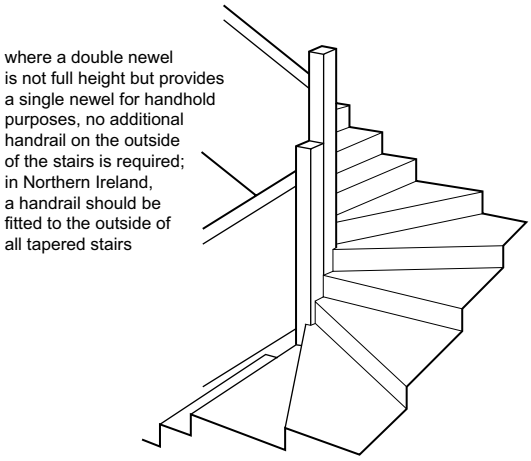

Also see: British Woodworking Federation Stair Scheme Installation Guide Timber Stairs and BS 585 Parts 1 and 2

6.6.12 Staircases made from timber and wood-based products

Staircases made from timber products shall be suitable for their intended purpose and of suitable quality.

The top nosing should be:

- level with the floor decking
- fixed firmly.

Newel posts should be plumb, and all components, including strings, treads and risers, newel posts, balustrading and handrails, fixed securely. Particular attention should be given to fixing winders.

Strings should be glued to the newel posts and secured with dowels or screws. Stair strings should be fixed to the wall in accordance with guidance supplied by the manufacturer or published by the British Woodworking Federation.

Landings should be framed to provide full support and solid fixings for the tops of flights, nosings, newels, apron linings, etc.

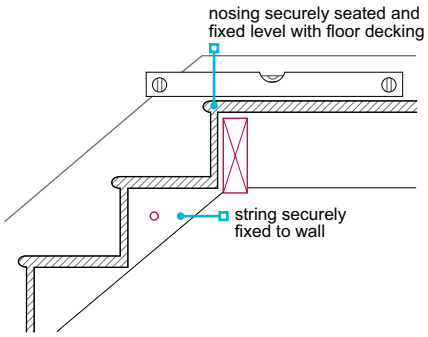

Timber used for external staircases should be in accordance with guidance from the Timber Decking and Cladding Association.

Finished joinery should be free from splits, knocks and other damage which would impair its structural performance or finish. Nails should be punched below the surface of the wood and stopped. Further guidance can be found in BS 1186-2.

Handrails should:

- have a smooth finish and be free from rough edges
- not have any sharp edges, including brackets or screw heads.

6.6.13 Concrete staircases

Also see: Chapter 3.1 and 3.2

Staircases made from concrete shall be suitable for their intended purpose and be of suitable quality.

Concrete staircases should be designed and manufactured in accordance with BS EN 1992-1-1.

Precast construction

Precast staircases should comply with BS EN 14843, and account should be taken of:

- accurate location and levelling of units
- load paths.

In-situ construction

Guidance for in-situ concrete can be found in Chapter 3.1 'Concrete and its reinforcement'.

Shuttering for concrete elements or connections should be constructed to ensure a consistent rise and going.

Chairs or spacing blocks should be used to provide cover to reinforcement in accordance with Chapter 3.1.

Formwork should be struck in accordance with the design information.

Design information on the spacing of bolt fixings for balustrades or handrails should be followed.

Balustrading for concrete staircases should be:

- grouted into the preformed holes or pockets
- bolted to brackets cast into the concrete.

Care should be taken when using expanding fixings near the edges of concrete.

6.6.14 Steel staircases

Staircases made from steel shall be suitable for their intended purpose and of suitable quality.

Steel staircases should be designed in accordance with BS EN 1993-1-1.

For steel staircases:

- the manufacturer's assembly and erection instructions should be available and followed
- the supporting structure should be constructed within relevant tolerance limits set for the steel staircase.

6.6.15 Proprietary staircase units

Proprietary staircases shall be suitable for their intended purpose and of suitable quality.

Proprietary staircases and associated components should comply with Technical Requirement R3.

6.6.16 Protection

Stairs shall be free from damage and unsightly marks.

Staircases should be protected to prevent damage and unsightly marking during construction.

When storing staircases, they should be:

- stacked on bearers
- suitably protected from the weather.

Timber staircases should be fixed in place only when the building is weathertight.

Staircases, stair treads, nosings, balustrades and handrails may be protected with timber strips, plywood or building paper.

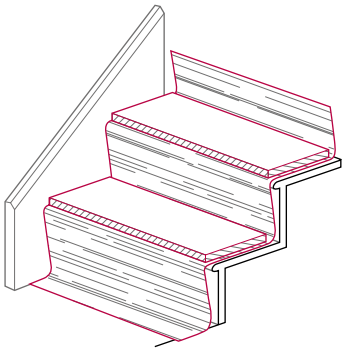

Doors, windows and glazing

CHAPTER 6.7

This chapter gives guidance on meeting the Technical Requirements for doors, windows and glazing, including where coupled door and window frame assemblies are contained within a single storey. Coupled door and window frame assemblies (including spandrel panels) which are:

- **one storey or more in height, or**
- **not contained between a structural floor and ceiling**

should be designed in accordance with Chapter 6.9 'Curtain walling and cladding'.

6.7.1	Compliance	01
6.7.2	Provision of information	01
6.7.3	In service performance	01
6.7.4	Installation	02
6.7.5	Non-timber windows and doors	03
6.7.6	Timber doors and windows	04
6.7.7	Glazing	05
6.7.8	Security	07
6.7.9	Ironmongery	08
6.7.10	Material storage and protection	09
6.7.11	Completed work	09

NHBC

Raising Standards. Protecting Homeowners

6.7.1 Compliance

Also see: Chapter 2.1

Doors, windows and glazing shall comply with the Technical Requirements.

Doors, windows and glazing which comply with the guidance in this chapter will generally be acceptable.

6.7.2 Provision of information

Designs and specifications shall be produced in a clearly understandable format, include all relevant information and be distributed to appropriate personnel.

Design and specification information should be issued to site supervisors, relevant specialist subcontractors and suppliers.

6.7.3 In-service performance

Doors, windows and glazing shall be designed and specified to ensure adequate in-service performance. Issues to be taken into account include:

a) weathertightness
b) fire safety
c) thermal break
d) strength
e) resistance to movement, shrinkage and the effects of moisture.

Weathertightness

Doors and windows should be installed correctly to ensure adequate in-service performance. Windows and external doors exposed to wind-driven rain should be constructed and detailed to ensure they remain weathertight, including at interfaces with the structure.

BS 6375 contains recommendations for the classification of window components according to their resistance under test to air and water penetration, and wind pressure.

Joints between multiple door and window frame assemblies should be:

- part of an engineered system
- formed using suitable materials in accordance with the manufacturer's recommendations.

Vertical and horizontal DPCs should be provided around the frame in accordance with Chapter 6.1 'External masonry walls' and Chapter 6.2 'External timber framed walls'.

DPCs should:

- be correctly installed
- extend approximately 25mm into the cavity
- be continuous for the full height of the frame.

When placing frames for external elements in openings, ensure:

- the head of the frame is protected by the lintel
- throatings in sill members are not obstructed by the wall face.

Additional precautions include:

- setting the frame back from the facade
- building a projecting porch
- providing a rain check groove to inward opening external door frames
- fixing weatherboards and water bars to external doors, but ensuring the threshold is accessible where appropriate.

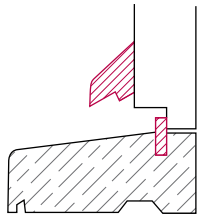

water bar and weatherboard provided for external doors

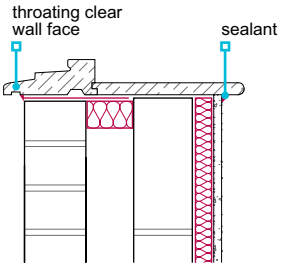

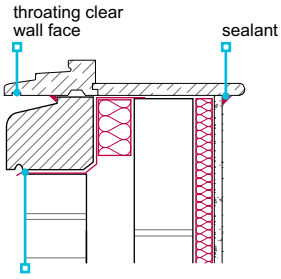

DPC turned up at back and ends of sills

In Scotland, Northern Ireland and areas of very severe exposure, 'check' reveals should be used, and an appropriate sealant applied between door/window frames and the structure.

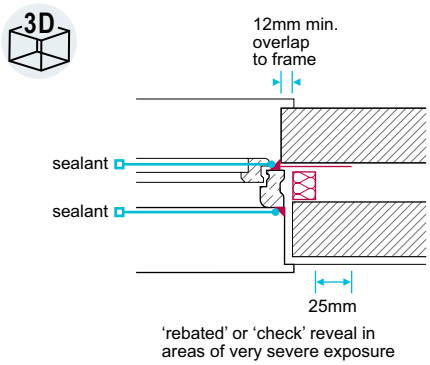

Fire safety

Fire-resisting doors and positive self-closing devices should be fitted where they are required by building regulations.

Thermal break

Metal windows should incorporate a thermal break.

Strength

Door frames, windows and their fittings should be adequate to withstand operational loads.

Structural loads should be carried on lintels, beams or appropriate structural elements. Where frames are required to carry structural loads, they should be designed accordingly.

Resistance to movement, shrinkage and the effects of moisture

Doors and windows should be designed to:

- avoid significant distortion, such as twisting and bowing during use
- take account of timber shrinkage
- be moisture resistant, including window boards.

6.7.4 Installation

Doors and windows shall be correctly located and securely fixed. Issues to be taken into account include:

a) workmanship and fixing
b) hanging doors and opening lights
c) general ironmongery
d) door hinges
e) window boards
f) bay windows.

Workmanship and fixing

Window and door frames should be fixed:

- solidly, level and plumb
- using door/window cramps, or plugged and screwed
- at maximum spacing of 600mm and within 150mm of the top and bottom (alternative locations and fixings are acceptable where they provide the same structural stability)
- using packers at fixing points where required.

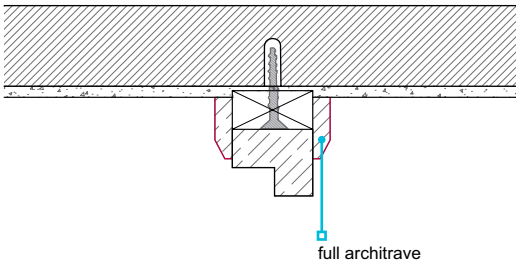

Internal door frames and linings should:

- match the thickness of the wall, partitions and finishes
- be blocked off walls wherever possible, to allow for full architraves
- be securely fixed, to prevent curling.

Timber trim should be:

- sufficiently wide to mask joints
- fixed to minimise movement and shrinkage.

Architraves should be:

- parallel to frames and linings
- accurately mitred, or scribed, to fit neatly and tightly
- fixed with an equal margin to each frame member
- fixed securely.

When fixing components:

- nails should be punched below the surface of the timber with holes stopped
- damage should be avoided.

Hanging doors and opening lights

Opening lights and door leaves should:

- hang square within the frame or lining
- fit neatly with minimum gaps.

A ventilation grille, or a gap at the bottom of the door may be required for ventilation, in accordance with building regulations.

Where a standard flush door is reduced in height, the bottom rail should be replaced where necessary.

General ironmongery

Hinges and other ironmongery should be:

- housed neatly and flush with the surface
- supplied with a full set of matching screws.

Locks should:

- turn easily
- not be fitted in mortises too tightly
- have keyholes which are properly aligned.

Door hinges

To reduce twisting, doors should be hung on hinges in accordance with Table 1.

Table 1: Door hinges

Type of door	Hinges
External	1½ pairs x 100mm
Internal door	1 pair x 75mm
Fire door	In accordance with the door manufacturer's recommendations
Airing or cylinder cupboard	1½ pairs x 75mm

Window boards

Window boards should:

- have a flat and level top surface
- be fixed close to the frame and adequately secured against twisting and other movement, particularly any back slope towards the frame
- be of a moisture resistant grade where MDF is used.

Bay windows

Bay windows should be:

- adequately supported and secured to the structure, to prevent sagging or twisting
- properly linked to DPCs at reveals.

6.7.5 Non-timber windows and doors

Doors and windows of materials other than timber shall be in accordance with the appropriate standards.

Relevant standards include the following:

BS 4873	'Aluminium alloy windows and doorsets. Specification'.
BS 6510	'Steel-framed windows and glazed doors. Specification'.
BS 7412	'Specification for windows and doorsets made from unplasticized polyvinyl chloride (PVC-U) extruded hollow profiles'.
BS EN 12608-1	'Unplasticized poly(vinyl chloride) (PVC-U) profiles for the fabrication of windows and doors. Classification, requirements and test methods. Non-coated PVC-U profiles with light coloured surfaces'.
BS 7414	'White PVC-U extruded hollow profiles with heat welded corner joints for plastics windows: materials type B'.

6.7.6 Timber doors and windows

Also see: Chapter 3.3 and 9.5

Timber and wood-based materials shall be of suitable quality and be naturally durable or suitably treated. Issues to be taken into account include:

a) classification and use
b) drying shrinkage
c) preparation and finish.

Classification and use

Timber windows should:

- comply with BS 644
- have a minimum 15mm rebate where double glazed units are to be installed.

Timber and wood-based materials should comply with the relevant requirements of BS EN 942 as follows:

Glazing beads	European Redwood
Casements and sash windows	J classes
All other elements	Table 1 of BS EN 942

In England, Wales, Northern Ireland and the Isle of Man, planted stops are not permitted on frames to external doors.

External doors should be 42.5mm minimum (44mm nominal) in thickness.

Drying shrinkage

To minimise drying shrinkage, the moisture content of joinery, when fixed, should not exceed the value given in Table 2.

Table 2: Moisture content of joinery

Joinery items	Moisture content (%)
Windows and frames	17
Internal joinery:	
- Intermittent heating.	15
- Continuous heating.	12
- In close proximity to a heat source.	9
On delivery, the moisture content should be within +/-2% of the values specified.	

Preparation and finish

The following elements of timber doors and windows should be of naturally durable timber or timber pretreated against fungal decay:

- External door frames.
- Windows.
- Timber surrounds to metal windows.
- External doors, other than flush doors.

Where material is:

- to be painted, it should be primed before fixing
- to be stained, it should have the first coat applied before delivery to site.

Compatibility between preservative treatment or primer, with glazing compounds, sealants and finishes, should be checked with the relevant manufacturers.

Prefabricated items should comply with the relevant parts of BS 1186 : Part 2, including:

- the fit and construction of joints and moving parts
- the construction of finger joints
- gluing and laminating
- surface finishes.

6.7.7 Glazing

Glass and the method of glazing shall be installed in accordance with the design and to ensure adequate in-service performance. Issues to be taken into account include:

a) standards
b) glazing compounds
c) glazing systems
d) insulating glass units
e) condition before installation
f) sizing
g) rebates
h) bead glazing.

Standards

Where there is a high risk of accidental breakage, glazing should be designed and selected to comply with relevant building regulations.

Where there is a particular risk (such as door side panels or 'low level' glazing) and where fully glazed panels can be mistaken for doors, toughened or laminated glass, or other materials such as acrylic or polycarbonate, may be required.

The glass supplier should provide documentation to confirm:

- the properties of the glass used
- compliance with the appropriate British Standards.

Glazed materials and units should be:

- compatible with the levels of safety and security that are required
- identified as safety glass with a permanent marking (includes glazed shower/bath screens).

Glazing should ensure adequate in-service performance. The quality and thickness of normal window glass should:

- be specified to suit the design wind loads for the location
- comply with BS 6262 and relevant data sheets issued by the Glass and Glazing Federation.

Glazing and materials should comply with appropriate British Standards, including:

BS 5516	'Patent glazing and sloping glazing for buildings'.
BS 6262	'Code of practice for glazing of buildings'.
BS EN 1279	'Glass in buildings-insulating glass units'.
BS EN 572	'Float glass'.
BS EN 14449	'Laminated glass'.
BS EN 12150	'Toughened glass'.
BS EN 572	'Wired glass'.
BS EN 1096	'Low-e coated glasses, including hard and soft coated'.

Glazing compounds

Glazing compounds should:

- be compatible with the frame finishes
- be in accordance with the manufacturer's recommendations.

Linseed oil based putty should not be used in the installation of laminated glass or insulating glass units.

Glazing systems

Drained and vented systems

Drained and vented systems should be used for site fixed insulating glass units and where units greater than 1m^2 are used, to allow moisture that enters the glazing channel between the frame and the edge seal of the insulating glass unit to drain away and prevent long-term moisture contact with the edge seal. Drained and vented systems should have:

- a minimum 5mm gap between the frame's lower rebate and the edge seal of the insulating glass unit
- adequate drainage and ventilation through holes, slots or channels
- the edge seal of the insulating glass unit adequately protected.

Fully bedded systems

Fully bedded systems are acceptable for factory glazing only where the insulated unit is less than 1m^2, and should:

- comply with the relevant parts of BS 8000, BS 6262 and BRE Digest 453
- not have gaps around the perimeter of the insulating glass unit.

Partially bedded insulating glass units may be fixed on site where bedded at the top and sides, providing the rebate platform is drained and vented.

Site glazed systems

Where doors and windows of materials other than timber are delivered to the site unglazed, all glazing should be carried out in accordance with the manufacturer's instructions.

Appropriate fixing and sealing systems should include:

- distance pieces, unless load-bearing tapes are used
- setting blocks
- location blocks, where required
- appropriate beads
- suitable glazing compounds, sealants, gaskets and/or capping.

Beads

In external situations, the bottom bead should:

- project slightly over the rebate edge
- be fixed to the rebate platform.

Insulating glass units

Insulating glass units should:

- carry a CE mark to BS EN 1279 and have third-party certification, e.g. BSI Kitemark
- be checked to ensure they comply with the design, including glass type, gas filling, edge seal type and dimensions
- have a dual seal or a single seal of hot melt butyl and desiccant in at least one long and one short section of the spacer bar.

Condition before installation

Glass and insulating glass units should be inspected for both visual defects and those which could lead to premature failure. Defects can be caused by:

- water accumulating between sheets, which may cause internal surfaces to become marked
- edge damage or scratching.

Insulating glass units should be adequately protected when stored prior to installation.

Sizing

To account for thermal expansion, the following gaps should be provided:

- 3mm gap between the glass edge and the frame
- 5mm gap at the bottom bead for drained systems.

Insulating glass units should not be cut or punctured on site.

Rebates

Rebates for glass should be:

- the correct size for the glazing
- primed where timber
- rigid and true.

Insulating glass units should be:

- protected from sunlight at the edges by the frame
- positioned to ensure the spacer bar is below the level of the frame's sightline.

Setting and location blocks should be of a suitable and resilient material.

In drained and ventilated frames:

- dimensions of holes and slots should be checked to ensure that effective drainage can occur
- drainage channels in the rebate should be free from obstructions that could prevent effective drainage.

Bead glazing

Beads and linings should be used for:

- internal glazing
- locations where shock absorption is required.

Beads should be fixed at a maximum of 150mm centres.

6.7.8 Security

Doors, door frames, windows and locks shall be designed and specified to improve their resistance to unauthorised entry. Issues to be taken into account include:

a) locking functionality of main entrance doors
b) locking functionality of secondary access doors
c) opening limitation device
d) view outside
e) glazing
f) framed wall construction
g) door and frame connections
h) windows.

Locking functionality – main entrance doors

All homes

Entrance doors of individual homes should be fitted with securely fixed locks or a multi point locking system, which:

- has at least 1000 differs
- if burst open, would not pull out without breaking the door or its frame
- has a hardened steel bolt, or inserts, to prevent sawing
- has a latch and deadlocking facility.

Locking devices fitted to main entrance doors should permit emergency egress without the use of a key when the home is occupied.

Homes with an alternative means of escape via a door

- The door should be held closed on a latch.
- Deadlocking should be operated by a key externally and a handle or thumb turn internally (BS 8621 locks and PAS 8621 multi point locks meet these requirements).
- Enhanced security can be achieved by providing the facility to deadlock the internal thumb turn when leaving the home unoccupied (BS 10621 locks and PAS 10621 multi point locks meet these requirements).

Homes opening directly to the outside without an alternative means of escape via a door

- The door should be held closed on a latch.
- Deadlocking should be operated by a key externally and a handle or thumb turn internally (BS 8621 locks and PAS 8621 multi point locks meet these requirements).

Homes opening onto a communal access without an alternative means of escape

- The door should be held closed with a roller bolt or a latch operated by a handle internally and externally.
- Deadlocking should be operated by a key externally and a handle or thumb turn internally (BS 8621 locks and PAS 8621 multi point locks meet these requirements).

Locking functionality – secondary access doors

Side hung doors should:

- be held closed on a latch operated by a handle both internally and externally
- have a deadlocking facility which can be operated by a key both internally and externally; alternatively, a thumb turn may be used internally (BS 3621 or BS 8621 (thumb turn) locks and PAS 3621 or PAS 8621 (thumb turn) multi point locks meet these requirements)
- have bolts securely fixed at both the top and bottom of the door on the internal opening edge (where multi point locking systems are used, bolts may be omitted).

Sliding doors should:

- be secured by way of a multi point locking system with a minimum of three locking points, incorporating mushroom-headed bolts, hook bolts or shoot bolts that engage into the jamb or head, and sill of the door frame
- have an anti-lift device fitted so that doors cannot be lifted from their frame from the outside.

Opening limitation device

The main entrance door of individual homes should be fitted with a securely fixed opening limitation device.

In sheltered accommodation, opening limitation devices should not inhibit emergency access. Alternative methods for residents to identify and communicate with visitors without opening their door should be considered.

View outside

There should be a means of giving a wide angle view of the area immediately outside the main entrance door of individual homes. Acceptable methods include:

- a through-door viewer
- clear glazing either to part of the door or a convenient window
- closed-circuit camera and displays (not connected to a TV).

Glazing

Any glazing which, if broken, would permit release of the internal handle or thumb turn by hand or arm entry should be laminated.

Framed wall construction

Lightweight timber or steel framed walls next to doors fitted with locks operated internally with a handle or thumb turn should incorporate either timber sheathing (minimum 9mm thick) or expanded metal, 600mm wide and the full height of the door.

Door and frame connections

Connections between door and/or frame components which can be easily released from the outside should not be used. This includes accessible screw connections.

Windows

Opening lights on ground floor windows and others which are readily accessible from the outside may be fitted with lockable devices which cannot be released without a key.

6.7.9 Ironmongery

Ironmongery shall be suitable for the intended use.

Ironmongery should be provided in accordance with the design. Materials used for critical functions should comply with the appropriate standards, including:

BS EN 1935	'Building hardware. Single-axis hinges. Requirements and test methods'.
BS 3621	'Lock assemblies operated by key from both the inside and outside of the door'.
BS 8621	'Lock assemblies operated by key from the outside of the door and by handle or thumb turn from the inside of the door'.
BS 10621	'Lock assemblies in which the operating mode can be switched between the normal BS 8621 operating mode and a secure mode in which no egress is possible'.
BS EN 1906	'Building hardware. Lever handles and knob furniture. Requirements and test methods'.
BS EN 12209	'Building hardware. Mechanically operated locks and locking plates. Requirements and test methods'.
BS EN 1154	'Building hardware. Controlled door closing devices. Requirements and test methods'.

Ironmongery for windows should be supplied as follows:

- Hinges and fastenings of opening lights of windows should be of a type which prevents them from being opened from the outside when in the closed position.
- Where the windows are required by building regulations to have background ventilation, they may be fitted with trickle vents or some other means of providing ventilation which is controllable and located to avoid undue draughts. Windows with 'night vent' positions are not accepted as meeting this requirement.

Where doors to rooms containing a bath or WC have a securing device, it should be of a type capable of being opened from the outside in an emergency.

In sheltered accommodation, additional special provisions may be needed for all door locks, limiters and other fasteners, to enable wardens to gain access when necessary.

6.7.10 Material storage and protection

Joinery, door and window components shall be adequately protected against damp and decay. Issues to be taken into account include:

a) storage

b) cut ends.

Storage

Where joinery is stored on site, precautions should include:

- avoiding wetting during unloading
- stacking external joinery on bearers off the ground and covering with waterproof material
- storing internal joinery in a weather protected condition.

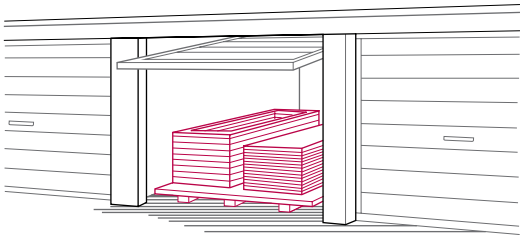

Cut ends

Where pretreated joinery is cut or adjusted on site, the affected surfaces should be retreated with appropriate preservative in accordance with the manufacturer's recommendations.

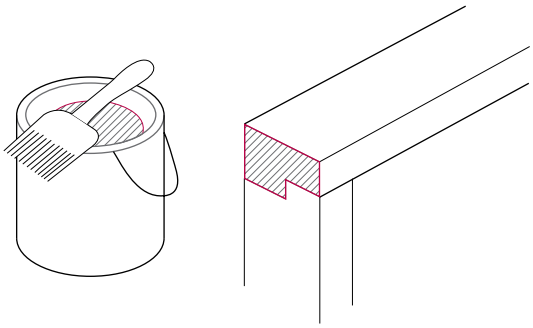

6.7.11 Completed work

Completed work shall be free from damage.

Work should be to an appropriate level of finish for other trades. Finishing trades should not be relied upon to correct untidy work.

Completed work should be protected as follows:

- Internal doors should be kept covered with polyethylene or original wrapping.
- Door frames and linings should be protected with timber strips or plywood by a minimum of 1m above skirting level.
- Thresholds and window sills should be covered.
- Scaffolding and walkways should be kept away from frames.
- Joinery should be protected from paint splashes and other damage.
- Temporary coverings should be removed after all other work has been completed and before handover.

Fireplaces, chimneys and flues

CHAPTER 6.8

This chapter gives guidance on meeting the Technical Requirements for fireplaces, chimneys and flues.

6.8.1	Compliance	01
6.8.2	Provision of information	02
6.8.3	Solid fuel - fireplaces and hearths	02
6.8.4	Solid fuel - combustion air	03
6.8.5	Solid fuel - flue pipes	03
6.8.6	Solid fuel - chimneys	04
6.8.7	Solid fuel - outlets and terminals	05
6.8.8	Gas - fireplaces and hearths	06
6.8.9	Gas - combustion air	07
6.8.10	Gas - flue pipes	07
6.8.11	Gas - chimneys	08
6.8.12	Gas - outlets and terminals	10
6.8.13	Oil - fireplaces and hearths	11
6.8.14	Oil - combustion air	11
6.8.15	Oil - flue pipes	12
6.8.16	Oil - chimneys	12
6.8.17	Oil - outlets and terminals	13
6.8.18	All - fireplaces and hearths	13
6.8.19	All - fireplace surrounds	14
6.8.20	All - flue pipes	15
6.8.21	All - flue liners	15
6.8.22	All - flues	16
6.8.23	All - chimneys	16
6.8.24	Masonry	19
6.8.25	Mortar	19
6.8.26	DPC	19
6.8.27	Flashings	19
6.8.28	Terminals	19
6.8.29	Flue testing	20
6.8.30	Further information	21

NHBC

Raising Standards. Protecting Homeowners

Introduction

In this chapter, the following terms are used:

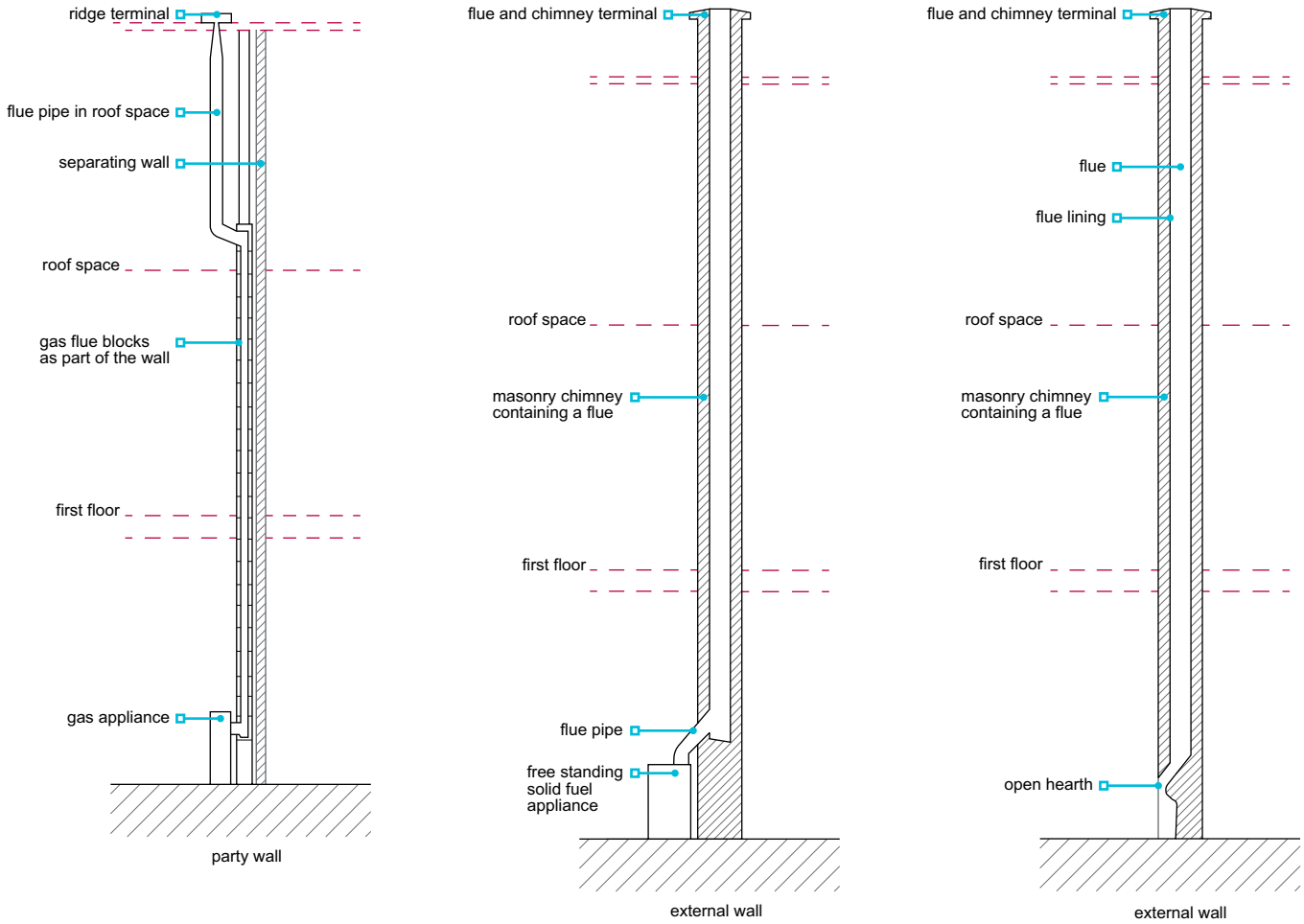

6.8.1 Compliance

Also see: Chapter 2.1

Fireplaces, chimneys and flues shall comply with the Technical Requirements, and be designed to ensure efficient operation of the appliance, an adequate supply of combustion air and protection for the building fabric.

Fireplaces, chimneys and flues which comply with the guidance in this chapter will generally be acceptable.

Installations should be provided with an adequate supply of combustion air:

- as stipulated by statutory requirements and building regulations
- to ensure satisfactory combustion of fuel and the efficient working of flues and chimneys.

Where a chimney or flue is provided:

- it should be continuous from the hearth or appliance to the outside air
- a notice plate containing safety information about any hearths and flues should be securely fixed in an unobtrusive but obvious position within the home.

The design of homes which incorporate chimneys and flues should ensure that all details of the associated elements are considered and appropriate provisions made. This should include the following:

- Fire risk and separation.
- Hearths and the constructions adjacent to hearths and flues.
- Chimneys and flues, including projections through the building.
- Terminals and outlets.
- Limitations on the appliance or open fire which can be installed, and fuel which can be used.

Good workmanship and effective supervision during construction are essential to ensure that fireplaces, chimneys and flues function correctly in use.

Fireplaces, chimneys and flues should be designed and installed to minimise the risk of the building catching fire. The design of timber frame construction should ensure that combustible material is:

- suitably separated from heat sources, or
- shielded, where permitted.

6.8.2 Provision of information

Designs and specifications shall be produced in a clearly understandable format, include all relevant information and be distributed to the appropriate personnel.

Clear and fully detailed drawings should be available on site to enable work to be carried out in accordance with the design. Designs and specifications should be issued to site supervisors, relevant specialist subcontractors and suppliers, and include the following information:

- Position and size of hearths, fireplaces, chimneys and flues.
- Position and proximity of combustible materials.
- Position and details of flue terminals or outlets.
- Position of DPCs and flashings.
- Construction details of fireplace openings and chimney connections.
- Details of materials to be used.
- Limitations of the type of appliance or open fire that can be installed and fuel that can be used.
- Details of the tests required on chimneys and flues, including who is responsible for carrying them out.

6.8.3 Solid fuel – fireplaces and hearths

Fireplaces and hearths shall safely accommodate the fire or appliance for which they are designed. Issues to be taken into account include:

a) provision of hearths and recesses

b) separation of hearths from walls.

Where appliances are not provided, it is important to construct fireplaces and hearths to suit the appliance most likely to be fitted.

Provision of hearths and recesses

Constructional hearths should be:

- provided for open fires or closed combustion appliances in accordance with building regulations and the manufacturer's recommendations
- a minimum of 840mm in any direction for freestanding appliances
- The adjacent diagram shows the minimum dimensions from the appliance to the edge of the hearth.

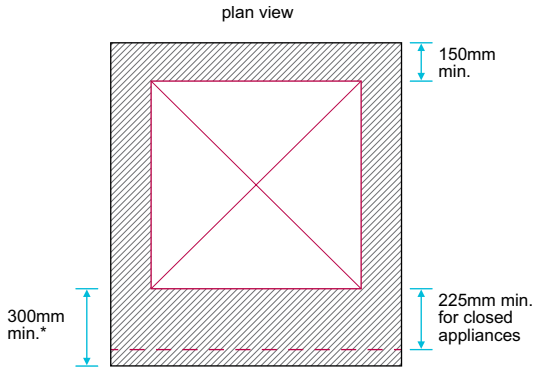

*applies to open and closed appliances which can be used when the appliance door is open

Recesses for open fires or closed combustion appliances:

- should be provided to comply with building regulations and the manufacturer's recommendations
- should be lined with a fire back or fire bricks
- where the opening is less than 500mm x 550mm, should have a 200mm diameter flue (or square section flue of an equivalent area)
- where the opening is larger than 500mm x 550mm, should have a flue equivalent to 15% of the recess opening.

Separation of hearths from walls

Walls near appliances and their hearths should be:

- located to minimise the risk of fire
- non-combustible, or the appliance should not be positioned closer to the wall than as shown in the following diagram.

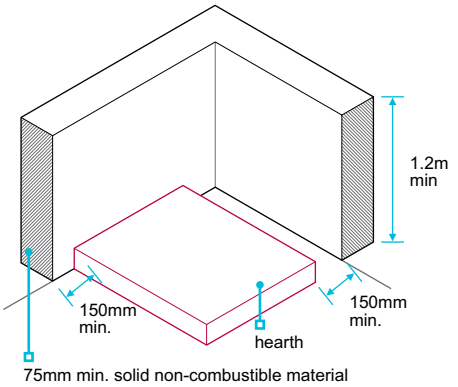

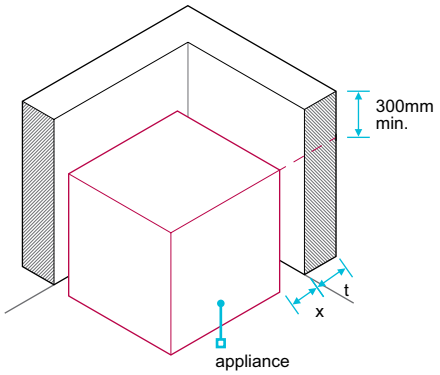

t = thickness of solid non-combustible material as follows:
x less than 50mm = t (200mm min.)
x more than 50mm = t (75mm min.)

6.8.4 Solid fuel - combustion air

Installations shall be provided with an adequate supply of combustion air.

Solid fuel appliances should have an air supply from external air, either directly or indirectly, to comply with statutory requirements and the manufacturer's recommendations. Full details of ventilation requirements for all types of appliances are contained in relevant building regulations.

Table 1: Combustion air to solid fuel appliances

	Solid fuel up to 45kW output	
	Open	Closed appliance(2)
England, Wales and the Isle of Man	50% of throat area(1)	Above 5kW rating, 550mm²/kW
Scotland	For fireplaces up to 450mm wide (measured between fire bricks), 1500mm² For fireplaces wider than 450mm, manufacturer's details should be followed	Above 5kW rating, 550mm²/kW
Northern Ireland	50% of throat area(1)	Up to 6kW rating, 550mm² Over 6kW, add 550mm² for each kW above 6kW

Notes

1 Where the fire has a canopy, the open air vents should be 50% of the flue area.

2 Where closed appliances use a flue fitted with a draught stabiliser, the total free area should be increased to 300mm²/kW for the first 5kw plus 850mm²/kW for the balance of the appliance output.

6.8.5 Solid fuel - flue pipes

Flue pipes shall be correctly designed to connect an appliance to a flue safely. Issues to be taken into account include:

a) size, direction and jointing

b) separation from combustible materials.

Size, direction and jointing

Flue pipes should have a cross-section which is equal to the outlet of the appliance they serve and should not be inclined more than 45° from vertical. A horizontal section no longer than 150mm may be used to connect a back outlet appliance to a flue. Socket joints should be fitted socket up.

Separation from combustible materials

Flue pipes should be separated from combustible materials in accordance with building regulations, and:

- by a minimum 200mm of non-combustible material
- by an air space which is a minimum of 4xD, or
- be shielded by a non-combustible shield at least 4xD in width, and extended at least 1.5xD either side of the flue pipe; the shield should be at least 12mm from the combustible material, and the flue pipe at least 1.5xD from the combustible material.

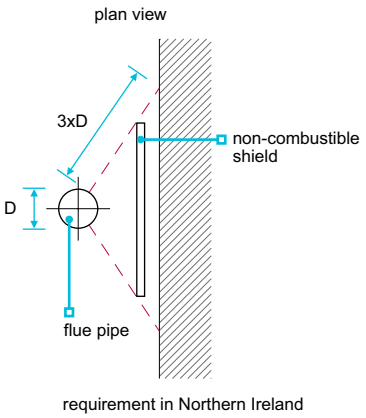

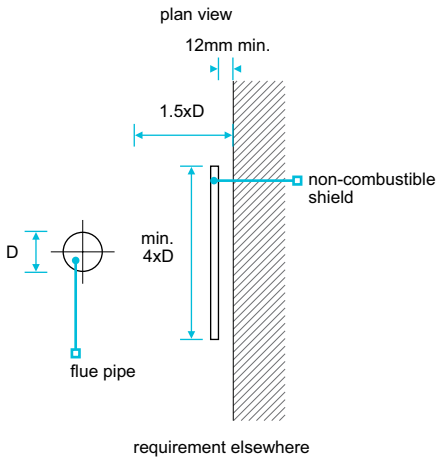

(D = external diameter of the flue pipe)

6.8.6 Solid fuel - Chimneys

Chimneys shall incorporate flues capable of safely conducting products of combustion to the external air. The structure shall be capable of supporting the flue lining and shall provide adequate protection to the adjacent structure. Issues to be taken into account include:

a) separation from adjacent spaces and materials
b) flue liners
c) resistance to frost attack
d) resistance to weather.

Flues for solid fuel appliances should:

- not serve more than one appliance
- be of a sufficient cross-section to remove all combustion gases from the open fire or appliance they serve
- where possible, be vertical (where this cannot be achieved there should not be more than two bends; bends should not be more than 45° from vertical)
- be a minimum of 4.5m high (measured above the fireplace opening).

Where a chimney is not directly over an appliance or opening, an accessible soot box should be formed.

Factory-made insulated chimneys should:

- be designed in accordance with BS EN 1856 and BS EN 1859
- have a minimum operating life of 30 years
- be installed in accordance with BS EN 15287 or be assessed in accordance with Technical Requirement R3.

Separation from adjacent spaces and materials

Combustible materials close to any brickwork or blockwork chimney (not applicable to floorboards, skirting, dado or picture rails, mantelshelves or architraves) should be:

- a minimum of 200mm from the inside surface of the flue, or
- in all areas except Scotland, 40mm from the face of the chimney.

Where the home is of timber frame construction, full details of the separation proposal should be included in the design.

Materials used for chimneys should be capable of resisting fluctuating temperatures up to 1100°C.

Flues should be formed within masonry walls. The walls should be:

- a minimum of 100mm thick, or
- a minimum of 200mm thick where separating the flue from another compartment of the same building, another building or another home.

Where there is more than one flue in a chimney, the flues should be separated by a minimum of 100mm of masonry.

Flue liners

Flue liners should:

- have rebated or socketed joints installed with the socket or internal rebate facing uppermost
- be installed in accordance with the manufacturer's recommendations
- be non-combustible
- be properly jointed at their junctions with the starter block, or lintel, and the outlet terminal
- be reasonably smooth on the inside
- be correctly jointed with mortar (the space between the liners and the brickwork should be filled with weak insulating concrete unless the manufacturer recommends an alternative)
- have any changes in direction formed using purpose-made bends (cut pipes are not acceptable).

Resistance to frost attack

Where clay brick chimneys are above roof level and are not protected by a capping with an adequate overhang and drip (see Clause 6.8.7c), the chimney should be constructed using F2,S1 or F2,S2 bricks to BS EN 771. They should be bedded in mortar, either:

- 1:½:4 to 4½, cement:lime:sand, or
- 1:3 or 4, cement:sand with plasticiser.

Where external chimneys built with clay bricks of F2,S1 designation are rendered, sulfate-resistant cement should be used.

In Scotland, external facing brickwork should be constructed using frost-resistant bricks.

Resistance to weather

In areas of severe or very severe exposure, cavities should be continuous up to roof level. This applies to:

- cavities below roof level where the stack forms part of an external cavity wall
- the complete chimney structure, including the fireplace recess.

In areas of severe or very severe exposure, and where the chimney breast is gathered in, the lower projecting masonry should be protected against damp penetration with a suitable capping and cavity trays (see Clause 6.8.28b).

Above the roof:

- chimney DPCs should link with flashings; where the roof is steeply pitched (where the difference in level between the lower and higher intersection of the chimney with the roof will be more than 450mm) two DPCs should be used at suitable levels
- plastic DPCs are not suitable
- face brickwork should not have recessed joints
- where lead trays are in contact with mortar, they should be protected with a thick coat of bitumen or bitumen paint
- where chimneys are to be rendered, render should be in accordance with Chapter 6.11 'Render'.

6.8.7 Solid fuel – outlets and terminals

Outlets and terminals shall be adequately separated from combustible material and other parts of the home, enable the satisfactory discharge of flue gases and prevent the ingress of damp. Issues to be taken into account include:

a) outlet position
b) terminals
c) chimney cappings.

Outlet position

The flue will generally function more effectively where the outlet is in a low pressure zone, taking account of prevailing winds.

A low pressure zone generally occurs:

- on the lee side and at the ridge of a pitched roof
- close to the windward side of a flat roof.

Where the efficiency of the flue may be affected by adjacent trees or buildings in the 'low pressure' zone, the design should account for their effects.

Where down draughts occur, e.g. on hillsides or near tall trees and buildings, the height of the flue outlet may have to be increased or a fan-assisted flue installed.

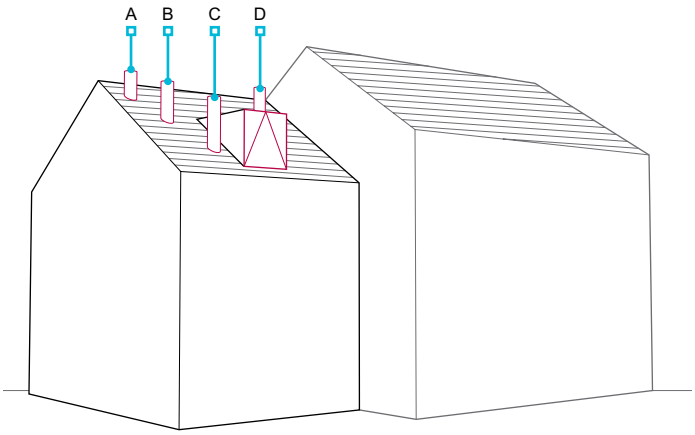

Table 2: Positions of outlets for solid fuel appliances

	Point where flue passes through weather surface(1 & 2)	Minimum clearance from the flue outlet
A	Up to 600mm from ridge	Over 600mm above the ridge
B	Elsewhere on a roof (whether pitched or flat)	A minimum of 2.3m horizontally from the nearest point on the weather surface and: ■ a minimum of 1m above the highest point of intersection of the chimney and the weather surface, or ■ as high as the ridge
C	Below (on a pitched roof) or within 2.3m horizontally from an openable rooflight, dormer window or other opening(3)	A minimum of 1m from the top of the opening
D	A minimum of 2.3m to adjoining or adjacent building, whether or not beyond the boundary(3)	A minimum of 600mm above the adjacent building

Notes
1 The weather surface is the building's external surface, such as its roof, tiles or external walls.
2 A flat roof has a pitch less than 10°.
3 The c learance given for A or B, as appropriate, will also apply.

Terminals

Terminals should be:

- purpose-made components
- built into the top of the masonry to a minimum of 125mm or 0.25x the length of the terminal, whichever is the greater
- sealed to the flue liner.

An acceptable terminal can be achieved where the top flue liner projects a minimum of 20mm above the chimney capping.

Chimney cappings

Chimney cappings should:

- be weathered, monolithic slabs
- be designed to protect the masonry below
- project a minimum of 50mm, and have a drip to shed water clear of the masonry.

Cappings may be designed as a cover slab supported on piers (to reduce rain penetration into the top of the flue). The height of the supporting piers should be sufficient to allow a free opening equivalent to a minimum of 2x the area of the flue outlet.

Brick chimneys which do not have this type of capping should be constructed using frost-resistant masonry.

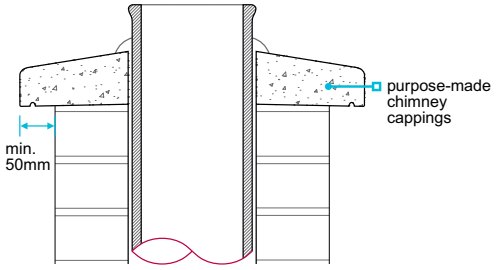

flue lining acting as flue terminal

6.8.8 Gas – fireplaces and hearths

Fireplaces and hearths shall safely accommodate the fire or appliance for which they are designed. Issues to be taken into account include:

a) separation from combustible materials

b) provision of hearths and recesses.

Gas appliances should be:

- fitted by a Gas Safe Register (GSR) installer, and
- comply with the Gas Safety (Installation and Use) Regulations 1998.

Separation from combustible materials

Appliances should not be closer than 75mm to combustible material. This applies to:

- the back, sides and top of the appliance
- draught-diverters.

It does not apply:

- where a 25mm thick non-combustible shield is used, or
- to gas-fired appliances with CE marking, installed in accordance with the manufacturer's written instructions, which clearly indicate such separation is not necessary.

Provision of hearths and recesses

Solid fuel effect appliances

Hearths and recesses for solid fuel effect appliances should be:

- in accordance with BS 5871
- in accordance with the requirements for solid fuel appliances (see Clause 6.8.3), or
- where the appliance has been tested by an approved authority, in accordance with the manufacturer's instructions.

Back boilers

Hearths for back boilers should be constructed of solid non-combustible materials, a minimum of:

- 125mm thick, or
- 25mm thick and placed on non-combustible supports which are a minimum of 25mm high.

Other gas appliances

Hearths for other types of appliance should be constructed of non-combustible materials which:

- are a minimum of 12mm thick
- comply with the plan dimensions for back boilers.

In some cases, the provision of a hearth is not required, e.g. where the flame or incandescent material is at least 225mm above the floor.

For all forms of gas appliances the hearths should be marked at the edges to:

- provide a warning to the home owner
- discourage combustible floor finishes, such as carpet, from being laid too close to the appliance (this can be achieved by introducing a change in level).

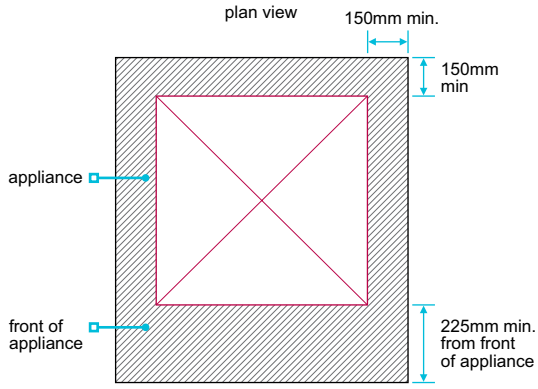

hearth for back boiler

6.8.9 Gas – combustion air

Installations shall be provided with an adequate supply of combustion air.

Table 3: Combustion air to gas appliances

	Gas[1] up to 70kW input
England, Wales and the Isle of Man	Over 7kW input, 500mm²/kW
Scotland	As BS 5440-2 (as England and Wales)
Northern Ireland	Up to 8kW rating, 450mm² Over 8kw, add 450mm² for each kW above 8kW

Notes

1 Decorative fuel effect gas appliances should have a provision for combustion air complying with the relevant part of BS 5871 and relevant building regulations. (Generally, a minimum of 10,000mm² of purpose-provided ventilation is required. Air vents should be direct to the external air or to an adjacent room or internal space, which has an air vent or vents to the external air of at least the same free area. Air vents should have an aperture dimension no smaller than 5mm).

6.8.10 Gas – flue pipes

Flue pipes shall safely connect an appliance to a chimney, or a flue to a terminal. Issues to be taken into account include:

a) size, direction and jointing

b) separation from combustible materials.

Size, direction and jointing

Gas flue pipes should:

- not have adjustable draught control
- have a free area which is at least the same size as the outlet of the appliance
- not be horizontal (does not apply to balanced flues)
- be vertical where possible (where this is not possible, pipes should not be more than 45° from vertical)
- be fixed in accordance with the manufacturer's recommendations
- be fixed socket up and correctly aligned
- where the pipes are long, have support directly below each socket, with a maximum spacing of 1.8m.

When connecting flue pipes to flue blocks and ridge terminals, purpose-made connections should be used.

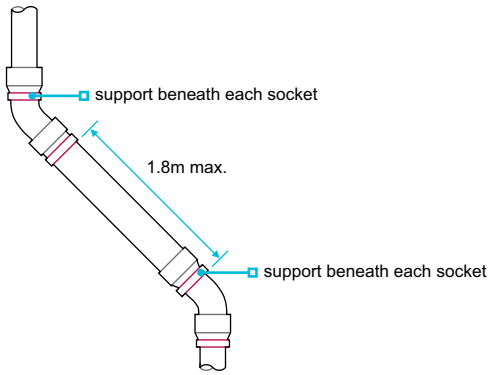

flue pipe serving a gas appliance

Separation from combustible materials

Single wall flue pipes should be separated from combustible materials by:

- a minimum of 25mm
- a non-combustible casing material with at least half the fire resistance of the separating wall or floor, where they pass through a compartment wall or compartment floor, or
- a non-combustible sleeve with a minimum 25mm air space around the pipe, where it passes through a wall, floor or roof.

Where double-walled pipes are used, the 25mm separation distance may be measured from the outside of the inner pipe.

6.8.11 Gas – chimneys

Chimneys shall incorporate flues capable of safely conducting products of combustion from an appliance to the external air. The structure shall be capable of supporting the flue and providing adequate protection to adjacent materials. Issues to be taken into account include:

a) flues and flue liners

b) chimneys.

Flues and flue liners

Flue blocks for use with gas appliances should comply with BS EN 1858 (Concrete) or BS EN 1806 (Clay).

Table 4: Gas flue sizes

	Serving	Minimum flue size
Non fan-assisted individually flued gas burning appliances up to 70kW input, excluding balanced flue	Gas fire	Either: - a circular flue with a minimum 12000mm^2 cross-sectional area (125mm diameter), or - a rectangular flue with a minimum 16,500mm^2 cross-sectional area and a minimum dimension of 90mm
	Any other	- At least the cross-sectional area of the outlet from the appliance
Inset live or decorative gas fuel effect appliances	Open fire within a fireplace opening up to 500mm x 550mm	- Either a circular or rectangular flue with a minimum dimension of 175mm

Rigid flue liners should comply with BS EN 1856 or be as described in Clause 6.8.6. Flexible flue liners are not acceptable in a new build.

Chimneys

Chimneys for gas appliances must not incorporate an adjustable draught control.

Masonry chimneys

Flues within masonry chimneys should be in accordance with the requirements relevant to flues for solid fuel appliances (see Clause 6.8.6b).

Brickwork or blockwork chimneys for gas appliances should, at minimum, have the same level of fire resistance as each compartment wall or floor which it forms part of, or passes through. The compartment wall may form the chimney wall where it is a masonry material.

Terminals to masonry chimneys should:

- where proprietary, comply with BS EN 1856, BS EN 1858 and the appliance manufacturer's recommendations
- where proprietary products are not used, have a free opening area a minimum of 2x the area of the flue; there should be openings (6-25mm in diameter) distributed uniformly around the terminal or on two opposite faces.

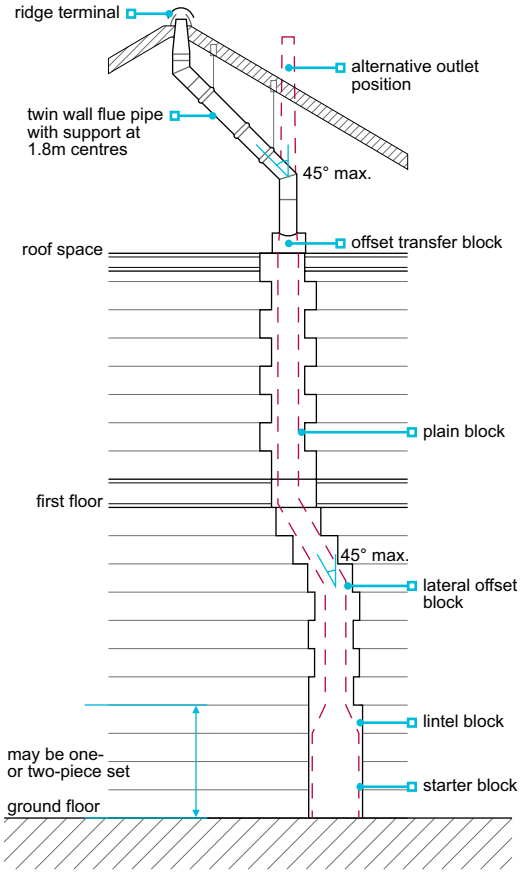

Flue block chimneys

Flue block chimneys can only be used for certain types of gas appliances and should be:

- compliant with BS EN 1858 or BS EN 1806 with a minimum performance class of FB4 N2
- constructed using units suitable for the appliance
- constructed, jointed and weatherproofed in accordance with the design and the manufacturer's instructions
- correctly bonded to the flanking masonry
- clean and sealed
- checked for suitability, before connecting any appliance.

Connections between flue blocks and ridge terminals should be made:

- in accordance with the design
- using the correct fittings and supports as specified by the manufacturers of the flue blocks, flue pipe and ridge terminal.

Gas flue blocks are at least 140mm wide. Where this is wider than the wall leaf:

- the extra thickness should be incorporated by increasing the overall width of the cavity
- the flue block should be installed flush with the inside of the cavity and project into the room as a false chimney breast, or
- where the cavity is reduced, the flue block should be protected by a vertical DPM supported by a layer of non-combustible insulation, in accordance with the manufacturer's instructions.

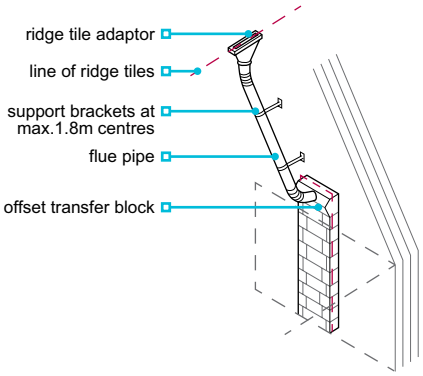

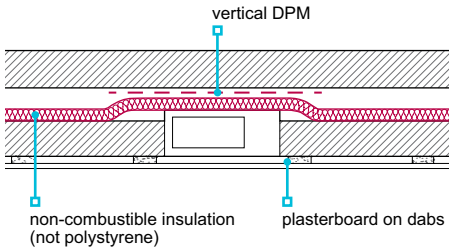

cavity wall with insulation and vertical DPM

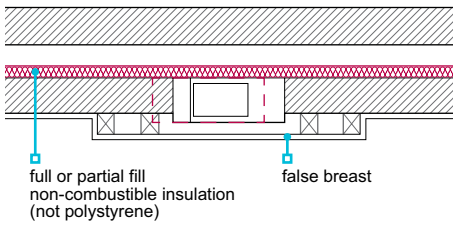

Flue blocks should not be:

- built into separating walls unless it can be shown that the wall has adequate sound resistance
- plastered; a plasterboard lining with an air space or non-combustible insulation behind it should be provided (insulated dry lining may be unsuitable in this situation unless separated from the flue block).

Factory-made insulated chimneys

Factory-made insulated chimneys should:

- be assembled, erected, anchored and protected in accordance with the manufacturer's instructions
- comply with BS EN 1856 and be installed in accordance with BS 6461, BS EN 15287-1 or BS 5440.

6.8.12 Gas – outlets and terminals

Outlets and terminals shall be adequately separated from combustible material and other parts of the home, and prevent the ingress of damp.

Table 5: Minimum separation distances for gas outlets (mm)

Location		Balanced flue			Open flue	
		Natural draught		Fanned draught	Natural draught	Fanned draught
A	Below an opening[1]	Appliance rated heat input (net)		300	[3]	300
		0-7kW >7-14kW >14-32kW >32kW	300 600 1500 2000			
B	Above an opening[1]	0-32kW >32kW	300 600	300	[3]	300
C	Horizontally to an opening[1]	0-7kW >7-14kW >14kW	300 400 600	300	[3]	300
D	Below gutters, soil pipes or drain pipes	300		75	[3]	75
E	Below eaves	300		200	[3]	200
F	Below a balcony or car port roof	600		200	[3]	200
G	From a vertical drainpipe or soil pipe	300		150[4]	[3]	150
H	From an internal or external corner, or to a boundary alongside the terminal[2]	600		300	[3]	200
I	Above ground, roof or balcony level	300		300	[3]	300
J	From a surface or a boundary facing the terminal[2]	600		600	[3]	600
K	From a terminal facing the terminal	600		1200	[3]	1200
L	From an opening in the car port into the building	1200		1200	[3]	1200
M	Vertically from a terminal on the same wall	1200		1500	[3]	1500
N	Horizontally from a terminal on the same wall	300		300	[3]	300
P	From a structure on the roof	N/A		N/A	1500 (for a ridge terminal) 2000 (for any other terminal, as given in BS 5440-1)	N/A
Q	Above the highest point of intersection with the roof	N/A		Site in accordance with manufacturer's instructions	Site in accordance with BS 5440-1	150

Notes

1 An opening here means an openable element, such as an openable window, or a fixed opening, such as an air vent. However, in addition, the 1 outlet should not be nearer than 150mm (fanned draught) or 300mm (natural draught) to an opening into the building fabric formed for the purpose of accommodating a built-in element, such as a window frame.

2 Boundary as defined in paragraph 0.4. of Approved Document J: smaller separations to the boundary may be acceptable for appliances that 2 have been shown to operate safely with such separations from surfaces adjacent to, or opposite, the flue outlet.

3 Should not be used.

4 This dimension may be reduced to 75mm for appliances of up to 5kW input (net).

Where a flue outlet is not serving a balanced flue appliance, it should be:

- situated at roof level, so that air can pass freely across it at all times
- a minimum of 600mm from openings
- fitted with a flue terminal where the flue diameter is less than 170mm (larger diameter flues should be fitted with a terminal where required by Building Regulations).

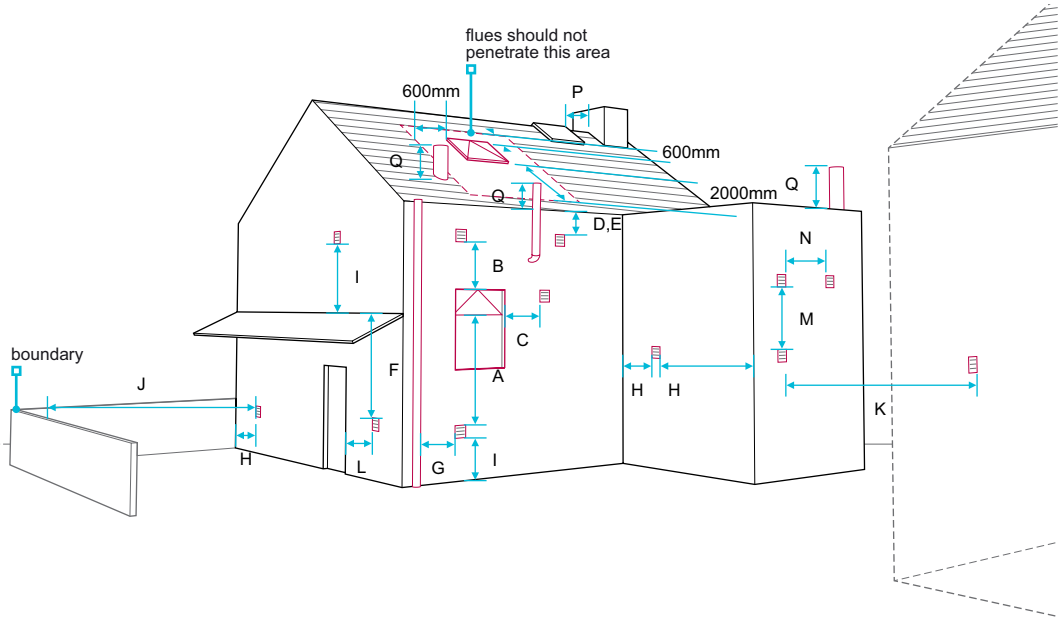

Precautions should be taken, where appropriate, to prevent damp penetration in accordance with the requirements for resistance to frost attack and weathering for solid fuel appliances (see Clause 6.8.6).

Balanced flues which bridge the cavity of an external wall should have a means of preventing moisture crossing the cavity, e.g. a moisture drip collar set in the centre of the cavity.

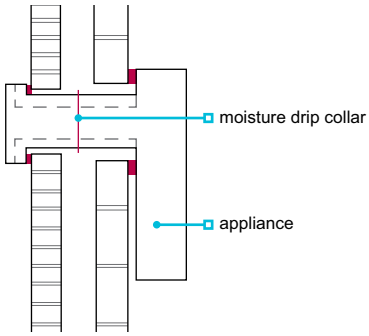

circular flues

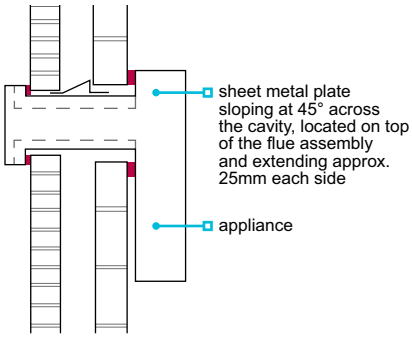

rectangular flues

6.8.13 Oil – fireplaces and hearths

Fireplaces and hearths shall safely accommodate the fire or appliance and be suitably separated from combustible materials.

Where the temperature of the hearth below the appliance is:

- likely to exceed 100°C, or the temperature is not known, precautions should be in accordance with the requirements for hearths for solid fuel appliances (see Clause 6.8.3).
- unlikely to exceed 100°C, the appliance may stand on a rigid, non-combustible imperforate sheet of material without a constructional hearth.

Where appliances are likely to have back or side temperatures exceeding 100°C, hearths and shielding should be in accordance with the requirements for gas appliances (see Clause 6.8.8).

6.8.14 Oil – combustion air

Installations shall be provided with an adequate supply of combustion air.

Table 6: Combustion air to oil appliances

	Oil up to 45kW output
England, Wales and the Isle of Man	550mm²/kW above 5kW rating for an appliance in a room or space
Scotland	
Northern Ireland	Up to 6kW rating, 550mm². Over 6kW, add 550mm² for each kW above 6kW

6.8.15 Oil – flue pipes

Flue pipes shall safely connect an appliance to a chimney.

Flue pipes should:

- have a free area which is at least the same size as the outlet of the appliance
- be vertical where possible, or no more than 45° from vertical; a horizontal section, less than 150mm, long may be used to connect a back outlet appliance to a flue.

6.8.16 Oil – chimneys

Chimneys shall incorporate flues capable of safely conducting products of combustion from an open fire or other appliance to the external air. The structure shall be capable of supporting the flue lining and shall provide adequate protection to adjacent materials. Issues to be taken into account include:

a) stability, size and direction
b) separation from adjacent spaces, materials and combustible materials
c) flue liners
d) resistance to frost/chemical attack
e) resistance to weather.

Stability, size and direction

Flue pipes should:

- have a free area which is at least the same size as the outlet of the appliance
- where possible, be vertical (where this cannot be achieved, there should be no more than two bends, which should not be more than 45° from vertical).

Factory-made insulated chimneys should:

- be designed in accordance with BS EN 1856 and BS EN 1859 and installed in accordance with BS EN 15287, or be assessed in accordance with Technical Requirement R3
- have a minimum operating life of 30 years
- where they are part of a component system, comply with BS EN 1856 and installed in accordance with BS 5440.

Separation from adjacent spaces, materials and combustible materials

Table 7: Protecting buildings from hot flues for flue gas temperatures not more than 250°C

Flue within:	Protection measures
Connecting fluepipe Factory-made chimney complying with BS EN 1856	Flues should be a minimum of 25mm from any combustible material. This is measured from the outer surface of the flue wall and the inner wall of multi-walled products. Where flues pass through a combustible wall, floor or roof (other than a compartment wall, floor or roof) separation can be achieved through the use of a non-combustible sleeve around the fluepipe or chimney with a 25mm air space to the relevant flue wall. The air space could be wholly, or partially, filled with non-combustible insulating material.
Factory-made chimney complying with: BS EN 1856	Refer to appropriate British Standards and manufacturers' recommendations.
Masonry chimney	Provide a minimum of 25mm of masonry between flues and any combustible material.
Flue block chimney	Provide flue block walls a minimum of 25mm thick.
Flue assemblies for roomed-sealed appliances	Flues passing through combustible walls should be surrounded by a minimum of 50mm insulating material. Provide a minimum clearance of 50mm from the edge of the flue outlet to any combustible wall cladding.

Flue liners

As for gas flue pipes where the flue gases are unlikely to exceed a temperature of 250°C (see Clause 6.8.10). As for solid fuel flue pipes where the flue gases are likely to exceed a temperature of 250°C or the temperature is not known (see Clause 6.8.5).

Flexible flue liners are not acceptable for new build.

Resistance to frost/chemical attack

Resistance to frost attack as for solid fuel (see Clause 6.8.6).

Resistance to weather

Resistance to weather as for solid fuel (see Clause 6.8.6).

6.8.17 Oil – outlets and terminals

Outlets and terminals shall be adequately separated from combustible material and other parts of the home.

Balanced flue terminals should be positioned to allow free intake of air to the appliance.

Where terminals are of masonry construction, they should be in accordance with the requirements for solid fuel appliances (see Clause 6.8.7b), otherwise they should be in accordance with the manufacturer's recommendations.

Table 8: Minimum separation distances for oil terminals

	Location of outlet(1)	Appliance with pressure jet burner (mm)	Appliance with vaporising burner (mm)
A	Below an opening(2 & 3)	600	Should not be used
B	Horizontally to an opening(2 & 3)	600	
C	Below a plastic/painted gutter, drainage pipe or eaves, where combustible material protected(4)	75	
D	Below a balcony or a plastic/painted gutter, drainage pipe or eaves without protection to combustible material	600	
E	From vertical sanitary pipework	300	
F	From an external or internal corner, or from a surface or boundary alongside the terminal	300	
G	Above ground or balcony level	300	
H	From a surface or boundary facing the terminal	600	
J	From a terminal facing the terminal	1200	
K	Vertically from a terminal on the same wall	1500	
L	Horizontally from a terminal on the same wall	750	
M	Above the highest point of an intersection with the roof	600(6)	1000(5)
N	From a vertical structure to the side of the terminal	750(6)	2300
O	Above a vertical structure which is less than 750mm (pressure jet burner) or 2,300mm (vaporising burner) horizontally from the side of the terminal	600(6)	1000(5)
P	From a ridge terminal to a vertical structure on the roof	1500	Should not be used

Notes

1 Terminals should only be positioned on walls where appliances have been approved for such configurations when tested in accordance with BS EN 303-1 or OFTEC standards OFS A100 or OFS A101.
2 An opening means an openable element, such as an openable window, or a permanently open air vent.
3 Not withstanding the dimensions above, a terminal should be at least 300mm from 3 combustible material, e.g. a window frame.
4 To provide protection to combustible material, fit a heat shield at least 4 750mm wide.
5 Where a terminal is used with a vaporising burner, the terminal should be at least 2.3m horizontally from the roof.
6 Outlets for vertical balanced flues in locations M, N and O should be in accordance with 6 manufacturer's instructions.

6.8.18 All – fireplaces and hearths

Fireplaces and hearths shall safely accommodate the appliances for which they are designed.

Combustible material should not be placed under a constructional hearth unless it is:

- to support the edges of the hearth
- at least 250mm from the material to the top of the hearth, or
- separated from the underside of the hearth by an air space of at least 50mm.

Fireplace recesses should be constructed of solid non-combustible material as follows (dimensions in the diagrams are based on a 125mm concrete hearth below an open fire). The space between a fire back and masonry forming the recess should be filled with vermiculite concrete (1:4, lime:vermiculite with water).

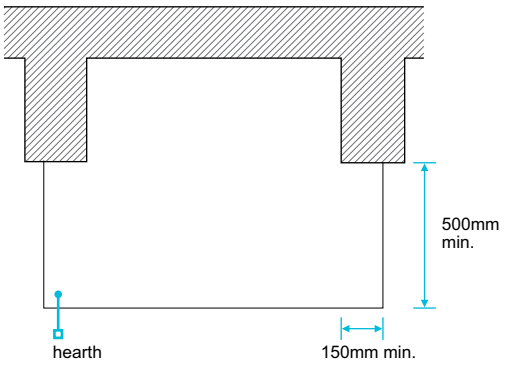

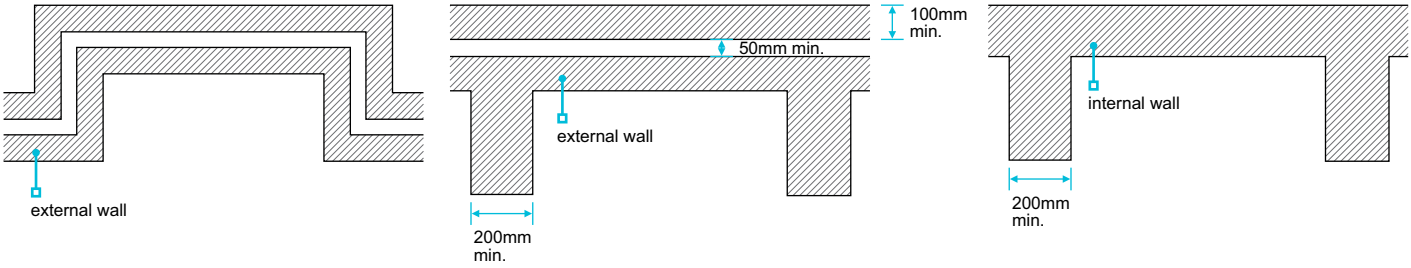

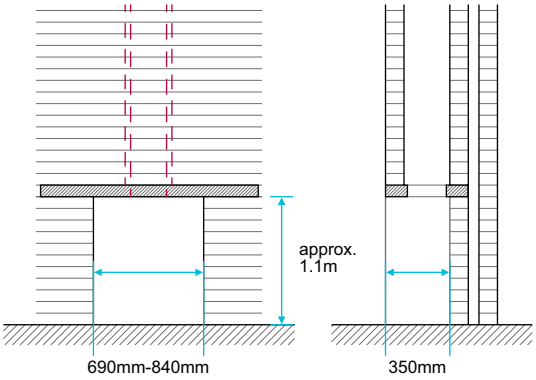

appliance recess with raft lintel:
suitable for free-standing room heater

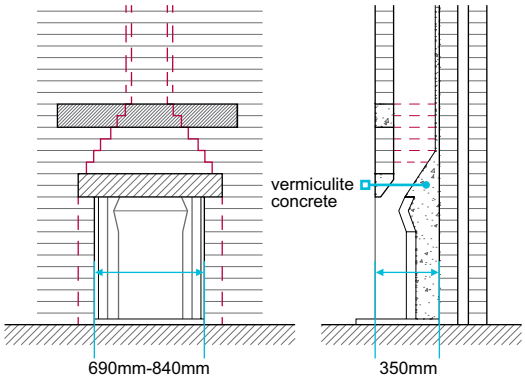

fire place recess for inset open fire (without boiler unit)

6.8.19 All – fireplace surrounds

Fireplace surrounds and their fixings shall be designed, specified and installed to ensure adequate in-service performance and durability.

The fixing and support should safely accommodate the proposed type of fireplace surround (which could be manufactured in one or a number of pieces), taking into account its size and weight. The walls and floors of the building should safely accommodate the additional load of the proposed fireplace surround.

Fireplace surrounds should be installed by competent operatives, strictly in accordance with the manufacturer's recommendations and fixing specification, and fixed to the structure using mechanical fixings, giving full consideration to:

- the type of material used to manufacture the surround
- the configuration of the surround
- the size and weight of the surround
- the potential for overturning of the surround or parts thereof
- the type of supporting walls and floors, including the structure (e.g. framed or solid structure) and its finish (e.g. wallboard or wet finish)
- the type, material, number and location of fixings.

Fixings should be of durable material and be appropriate for the type of surround and the supporting wall or floor to which the surround is to be fixed. Fixings should generally be of stainless steel to BS EN ISO 3506 'Mechanical properties of corrosion-resistant stainless steel fasteners' and be specified to provide suitable strength and durability. Materials that comply with recognised standards which provide equal or better performance are also acceptable.

Methods that rely solely on adhesive for fixing fireplace surrounds to the structure are not acceptable.

More information on the installation of all types of natural and artificial stone fireplace surrounds can be found in the Stone Federation Great Britain 'Fireplace Surrounds' data sheet (**www.stonefed.org.uk**).

6.8.20 All – flue pipes

Flue pipes and terminals shall be suitable for their purpose and provide unrestricted passage for combustion gases between the fireplace, or appliance, and the outlet.

The connection between a fireplace, or appliance, and the flue should be correctly constructed.

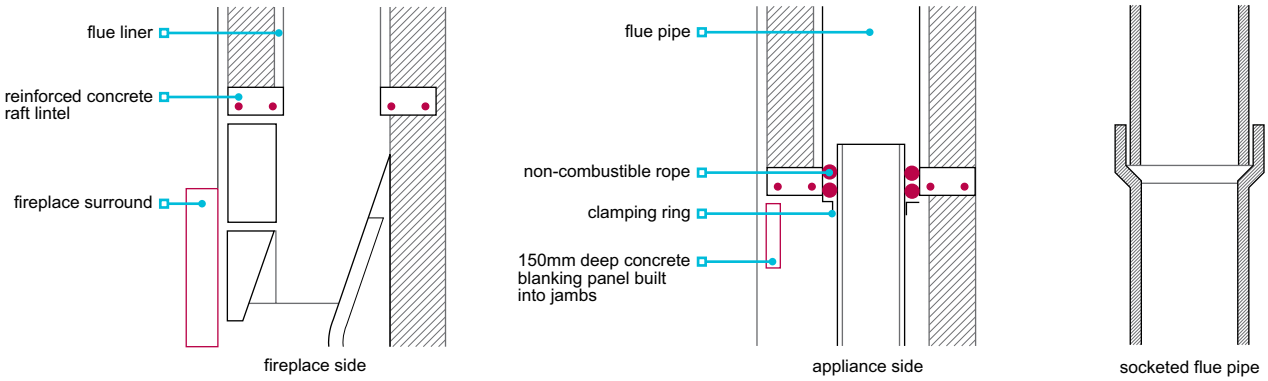

Where the bottom of the flue is not directly over an appliance, it should be provided with a means of access for cleaning and inspection.

Adjustable flue draught control units are not permitted where gas burning appliances are installed. Where adjustable throat units are specified, they should be fitted in accordance with the manufacturer's instructions.

Flue pipes should be jointed in accordance with the manufacturer's instructions, fixed socket up and correctly aligned.

Table 9: Acceptable standards for flue pipes

Flue material	Guidance
Flue pipes for gas appliances	BS EN 1856
Cast iron flue pipes	BS EN 1856
Mild steel flue pipes	BS 1449 (minimum 3mm wall thickness)
Stainless steel flue pipes	BS EN 10088 (minimum 1mm thick) and be one of the following grades: 1.4401, 1.4404, 1.4432 or 1.4436
Vitreous enamelled flue pipes	BS EN 1856, low carbon steel coated internally and externally with acid-resisting enamel

6.8.21 All – flue liners

Flue liners shall be unaffected by flue gases and suitable for their purpose.

To produce a suitable flue path, appropriate components should be selected to keep cutting and joints to a minimum. At changes in direction, including bends, offsets and tees, purpose-made components should be used.

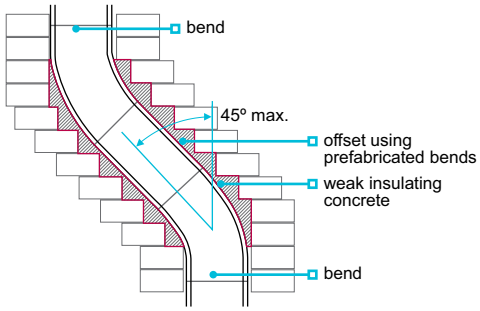

chimney with flue liner suitable for solid fuel

Flue liners should be:

- clay or purpose-made concrete, as specified in the design
- handled carefully to prevent chipping or cracking
- installed in accordance with the manufacturer's instructions and the design
- sealed at their joint with the starter block or throat unit (no cavity should be formed between the linings and the starter elements)
- placed with the sockets or rebate ends facing up.

Liners suitable for solid fuel appliances, and generally suitable for other fuels, include liners whose performance is at least equal to the designation T450 N2 S D 3, as described in BS EN 1443, such as:

- clay flue liners with rebates or sockets for jointing meeting the requirements for class A1 N2 or class A1 N1 as described in BS EN 1457
- concrete flue liners meeting the requirements for the classification type A1, type A2, type B1 or type B2 as described in prEN 1857(e18) January 2001, or
- other products that are independently assessed in accordance with Technical Requirement R3.

Alternatively, imperforate clay pipes with sockets for jointing as described in BS 65:1991 are acceptable.

Joints should be made in accordance with the manufacturer's recommendations, generally using:

- fire cement, or
- refractory mortar

Joints should be fully filled, and surplus material cleared from the inside of each joint as the flue is built.

Spaces between the lining and the surrounding masonry should be:

- filled with weak insulating concrete, or
- in accordance with the manufacturer's recommendations, with the specified material providing adequate protection.

Ordinary concrete should not be used to fill the space between the lining and the surrounding masonry.

Suitable mixtures for weak insulating concrete include:

- one part ordinary Portland cement to 20 parts suitable lightweight expanded clay aggregate, minimally wetted
- one part ordinary Portland cement to six parts vermiculite, or
- one part ordinary Portland cement to 10 parts perlite.

6.8.22 All – flues

Flues shall be suitable for their purpose and adequately separated from combustible materials.

Flues should be:

- suitable for the type and size of appliance which they serve
- constructed in accordance with the design and the manufacturer's recommendations
- tested in accordance with this chapter.

Combustible materials close to any brickwork or blockwork chimney should be:

- 200mm minimum from a flue
- 40mm from the face of the chimney, in Scotland, and
- metal fixings in contact with combustible materials should be a minimum of 50mm from the flue.

This does not apply to a floorboard, skirting, dado or picture rail, mantel shelf or architrave.

Twin wall flue systems should comply with:

- BS EN 1856, or
- be assessed in accordance with Technical Requirement R3.

6.8.23 All – chimneys

Chimneys shall provide fire protective casing for flues, and shall be capable of adequately supporting the flue liner, while resisting damp penetration and the products of combustion. Issues to be taken into account include:

a) construction of chimneys
b) typical construction details
c) damp penetration and weatherproofing
d) coring and drying.

Construction of chimneys

Masonry chimneys should be properly bonded to, or supported by, the adjoining walls of the building.

Foundations to a chimney should:

- be the same depth as adjacent wall foundations
- be designed to avoid uneven settlement
- where the chimney forms part of the wall, be a minimum of 100mm wider than the chimney base.

Height (H) of an unrestrained chimney should:

- not exceed 4.5x the smallest dimension on plan of the chimney (W) (where the density of the masonry is a minimum of 1500kg/m^3), or
- be designed by an engineer in accordance with Technical Requirement R5.

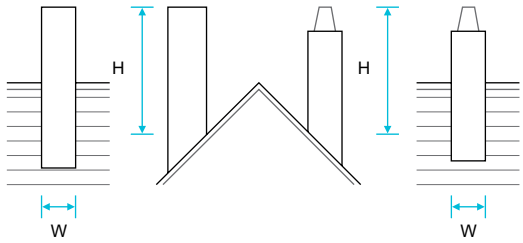

Chimneys which:

- are of block, brick or stone should have a minimum wall thickness of 100mm, excluding the lining thickness
- are built in a cavity separating wall should form two leaves, each a minimum of 100mm, between the flue and adjoining building
- form part of a compartment wall, and are not back to back with an adjacent chimney, should have a minimum wall thickness of 200mm separating it from the other building or home.

Factory-made insulated chimneys should be assembled, erected, anchored and protected in accordance with the manufacturer's instructions.

Masonry for chimneys:

- below roof level may be constructed using the same bricks and mortar as used for the general brickwork
- constructed with hollow or cellular blocks should be suitable for the construction of chimneys and filled with concrete as the work proceeds
- should be frost resistant above the roof unless protected by a capping projecting by a minimum of 50mm (in Scotland, frost-resistant bricks should be used for all facing brickwork).

Connections between flue blocks and ridge terminals should be made:

- as detailed in the design
- using the correct fittings and supports as specified by the manufacturers of the flue blocks, flue pipe and ridge terminal.

Typical construction details

External fireplace recess and chimney

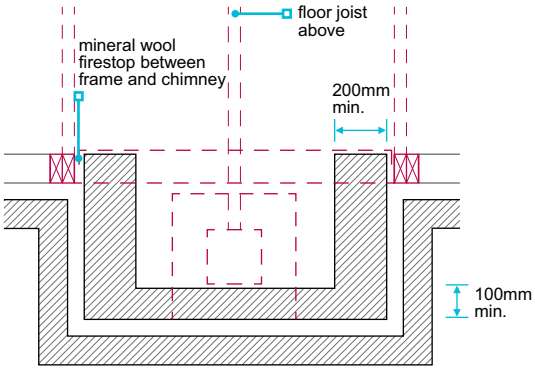

plan of recess

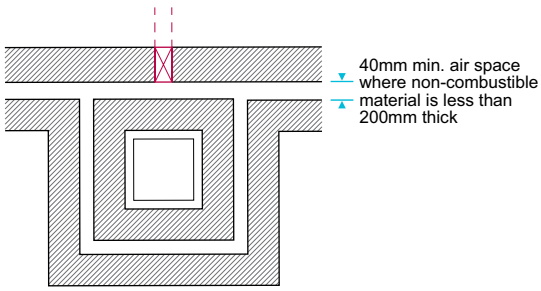

plan of chimney at upper floor level

Timber chimney frame construction

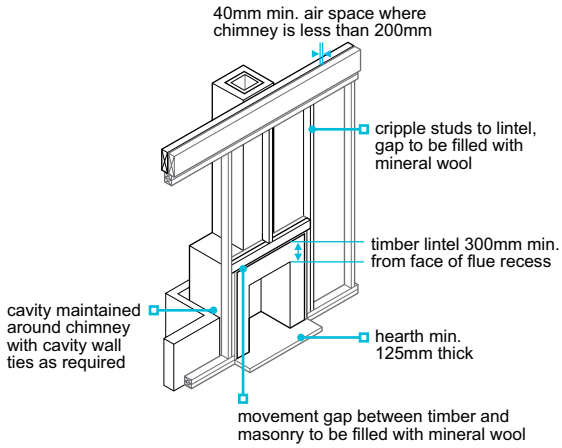

External chimney breast with masonry inner leaf

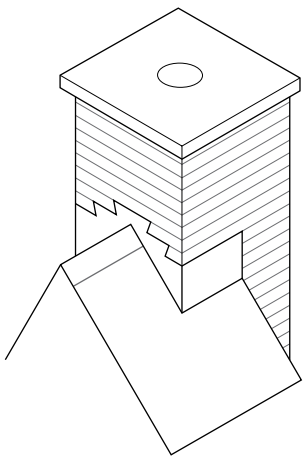

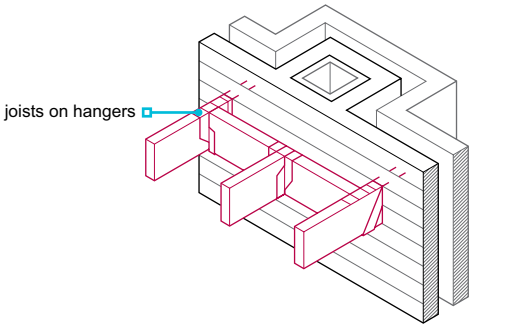

In Scotland, joists, etc. should be min. 200mm from the inner surface of the flue; brickwork or blockwork in chimney construction should be min. 100mm thick with a min. density of 1 600 kg/m³; aircrete blocks should be min. 150mm thick.

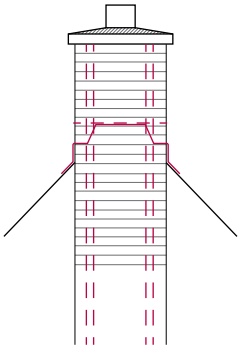

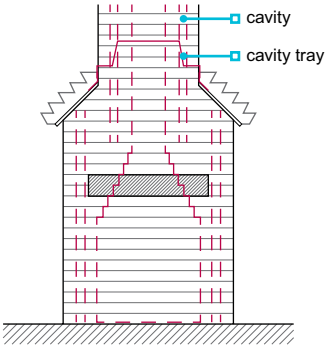

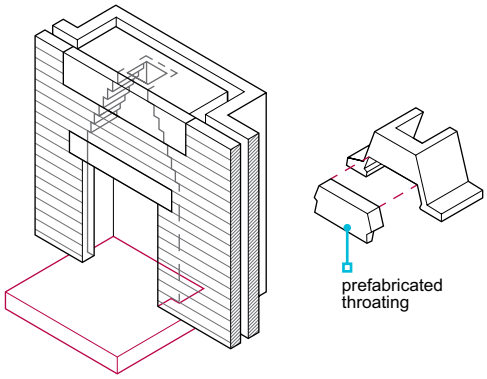

Other alternatives may be suitable, provided they meet the appropriate performance standards.

Damp penetration and weatherproofing

Where chimneys exit close to the ridge of a pitched roof, occasional damp penetration may occur below roof level. In this situation:

- the roof space should be well ventilated
- any dampness penetrating downwards should not reach the living areas.

Where chimneys exit close to the eaves of a pitched roof or through a flat roof, trays and flashings should be installed in the chimney so that all damp penetration is prevented.

DPCs, flashings and gutters should be provided at the intersection point of the chimney with the surface of the roof through which the chimney passes. DPCs to the main walls should be carried through the base of chimneys.

Flashings should be made from compatible non-ferrous metal. Lead trays should be bitumen coated where in contact with cement.

In areas of severe and very severe exposure, the following details should be used. In lower exposure zones, the tray upturn may be on the outside of the flue liner. All other details are the same.

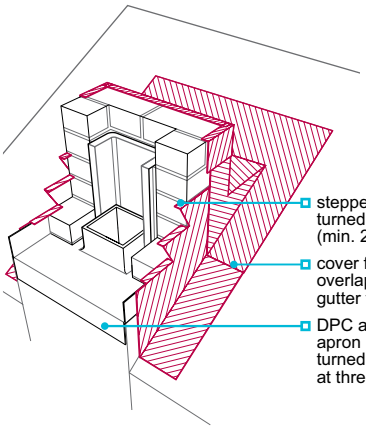

chimney on outside wall

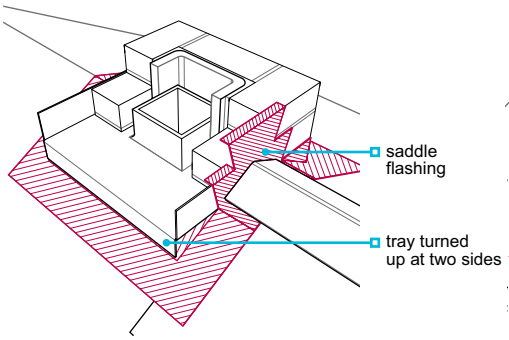

chimney stack at ridge

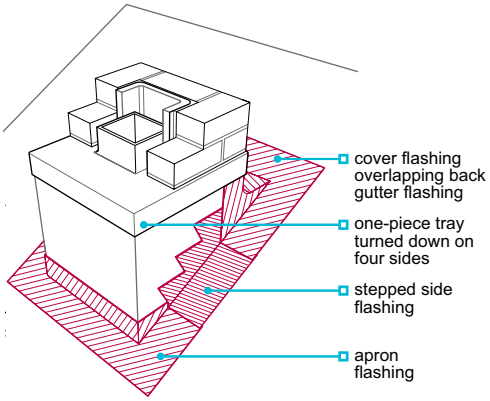

combined with DPC tray and flashing

Coring and drying

Where a core (e.g. a sack full of loose straw, or similar) is used to prevent mortar dropping into the flue liner during construction, the builder should ensure that it is removed on completion of the chimney.

A chimney should be allowed to dry naturally for a minimum period of 14 days before use.

6.8.24 Masonry

Masonry shall be capable of supporting intended loads and have appropriate resistance to the adverse effects of frost and sulfates.

Masonry, including bricks, blocks, stone for masonry and reconstructed stone, should:

- be in accordance with BS 6461 or BS EN 15287-1 and BS EN 771
- where clay bricks are used in external chimney stacks, be of durability rating F2,S1 (as described in BS EN 771) or protected by a projecting capping
- where blocks are used, have a minimum block density of 1500 kg/m^3 unless designed by an engineer in accordance with Technical Requirement R5.

In Scotland:

- frost-resistant bricks should be used for all external facing brickwork
- where 100mm blocks are used for chimney construction, they should have a minimum density of 1,500 kg/m^3.

6.8.25 Mortar

Also see: Chapter 6.1

Mortar shall be batched and mixed to achieve adequate strength and durability.

Mortar should be in accordance with Chapter 6.1 'External masonry walls', and include sulfate-resisting cement where flue gases are liable to affect the masonry, e.g. above roof level.

6.8.26 DPC

Materials for damp-proofing shall adequately resist the passage of moisture into the building.

The following are acceptable for use as DPCs:

- Bitumen to BS 6398.
- Polyethylene to BS 6515 (not to be used in the chimney stack above roof level).
- Proprietary materials assessed in accordance with Technical Requirement R3.

6.8.27 Flashings

Flashings and trays shall be capable of adequately resisting the entry of moisture into the building.

Suitable materials for flashings and trays include:

- milled sheet lead (minimum code 4) to BS EN 12588
- zinc alloy complying to BS EN 988 and 0.6mm thick
- proprietary materials assessed in accordance with Technical Requirement R3.

6.8.28 Terminals

Flue terminals shall be suitable for their purpose and assist the functioning of the flue. Issues to be taken into account include:

a) draught improvement

b) chimney capping.

Relevant standards for flue terminals

BS EN 13502	'Chimneys. Requirements and test methods for clay/ceramic flue terminals'.
BS EN 1858	'Chimneys. Components. Concrete flue blocks.'
BS EN 1856	'Chimneys. Requirements for metal chimneys'.

Terminals should be:

- purpose-made or formed by extending the flue lining a minimum of 20mm above the head of the chimney
- embedded a minimum of 125mm into the chimney, excluding any flaunching, or 0.25x the length of the terminal, whichever is the greater
- the same cross-sectional area as the flue (solid fuel has a minimum requirement of a 200mm diameter).

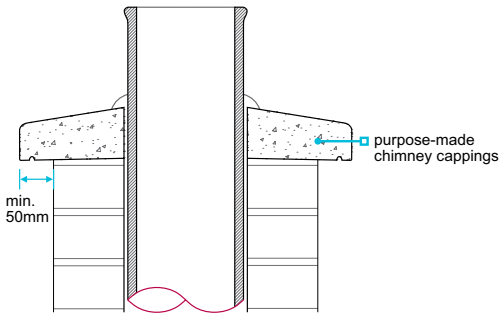

chimney pot

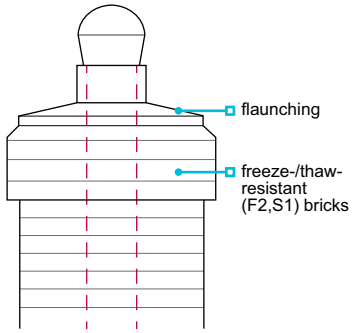

chimney details with brick capping

The terminal of a masonry flue should be jointed to the flue lining with cement mortar to form a seal.

Draught improvement

Where downdraughts may occur, terminals designed to increase updraught should be fitted. However, a terminal will not overcome problems caused by high pressure zones. Where relevant, the Solid Fuel Association or other authoritative body should be consulted.

Chimney capping

Where a chimney is to be capped:

- a single unjointed concrete or stone capping should be used
- it should project and be throated to cast water away from the face of the chimney
- the slab should project 50mm beyond the sides of the chimney, and the withes between flues should be carried to the underside of the slab.

Decorative brick cappings should be carefully constructed to avoid rain penetration and frost damage. The use of frost-resistant bricks may be required.

In Scotland, bricks used for facing brickwork should be frost-resistant.

6.8.29 Flue testing

Installations shall be tested before use.

Flues should be checked during construction to ensure:

- there are no obstructions in the flue
- mortar or other blockages are removed
- when the flue is complete, a visual check should be made and obstructions cleared.

Coring ball test for solid fuel appliances

When a visual test cannot be conducted, or is inconclusive, the coring ball test should be conducted as follows:

- A suitable concrete or metal ball should be attached to a strong cord or rope.
- The ball should be slowly lowered from the flue outlet to the bottom of the flue (the fireplace recess or the appliance connection).
- Where a blockage or obstruction is found, it must be removed and the test repeated until the flue is completely clear of obstruction.

Smoke test for solid fuel appliances

This test is designed to show that a flue draws adequately and that there are no leaks between the appliance and the terminal. It must be conducted when neither the flue to be tested or adjacent flues are in use. The test should be conducted as follows:

- The flue should be warmed for 10 minutes with a heat source such as a blow lamp. Where an appliance is fitted, all doors, including flue access doors, should be closed.
- Two purpose-made smoke pellets should be placed in the appliance firebox or in the bottom of the flue and ignited, then, closed or sealed off and the smoke allowed to rise.
- When smoke appears at the top of the flue, the outlet should be sealed with a blow-up rubber ball or other airtight closing system.
- The whole structure forming the flue should be inspected externally for smoke leakage. This should include the top of cavity walls and any other possible smoke paths, even those terminating some distance from the flue.
- The test should be continued for a minimum of five minutes.

Flues for gas appliances

For gas appliances, more sophisticated flue tests may be required and should be conducted by the appliance installer.

Flues for oil appliances

Flues for oil fired appliances should be tested as required by the appliance manufacturer.

6.8.30 Further information

- *Approved Document J - Combustion appliances and fuel storage systems.*
- *Building Standards (Scotland) Regulations*
- *Building Regulations (Northern Ireland) Technical Booklet L 'Combustion appliances and fuel storage systems'*
- *Institution of Gas Engineers publications: 'Guide for gas installation in timber framed housing' and 'Specification for flues for Class II appliances in timber framed housing'.*

Curtain walling and cladding

CHAPTER 6.9

This chapter gives guidance on meeting the Technical Requirements for curtain walling and cladding.

6.9.1	Compliance	03
6.9.2	Provision of information	03
6.9.3	Certification	03
6.9.4	Loads	03
6.9.5	Support and fixings	04
6.9.6	Durability	05
6.9.7	Interfaces	05
6.9.8	Insulation	05
6.9.9	Damp proofing and vapour control	06
6.9.10	Installation and tolerances	07
6.9.11	Electrical continuity and earth bonding	07
6.9.12	Maintenance	07
6.9.13	Glazing, gaskets and sealants	08
6.9.14	Cavity barriers and firestops	08
6.9.15	Ventilation screens	08
6.9.16	Handling and storage	08
6.9.17	Curtain walling	09
6.9.18	Rainscreen cladding	11
6.9.19	Insulated render and brick slip cladding	13

NHBC

Raising Standards. Protecting Homeowners

Introduction

This chapter gives guidance on the forms of curtain walling and cladding acceptable to NHBC. Curtain walling and cladding systems that do not conform to the descriptions in this chapter will not generally be acceptable. Conservatories are not covered by this chapter.

Guidance on the use of other types of cladding, including brickwork, rendered masonry, vertical tile and slate cladding and timber cladding, is given in Chapter 6.1 'External masonry walls' and Chapter 6.2 'External timber framed walls'.

Curtain walling

Comprising a prefabricated or site assembled support framework with infill panels and/or wall sections with glazing systems which include:

- structural silicone glazing
- mechanically fixed structural glazing
- slope glazing, excluding patent glazing
- coupled door and window frame assemblies (including spandrel panels) which are one storey or more in height, or not contained between a floor and ceiling.

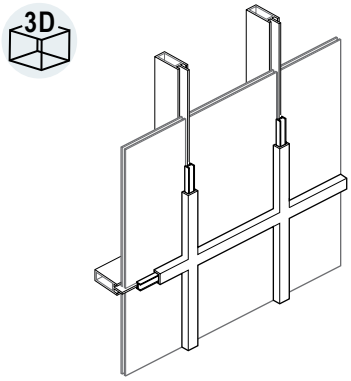

Rainscreen cladding

Comprising:

- an outer skin of panels which have unsealed, open, baffled or labyrinth (rebated) joints
- a minimum 50mm pressure equalised air gap between the insulation and the panels
- an insulated and airtight backing wall.

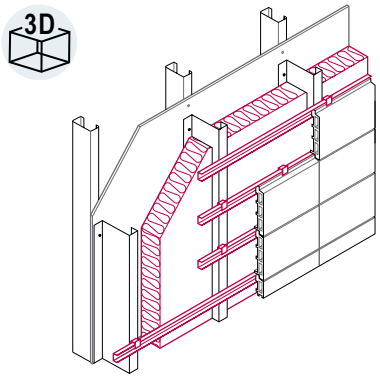

Insulated render

Comprising insulated render systems fixed to a backing wall.

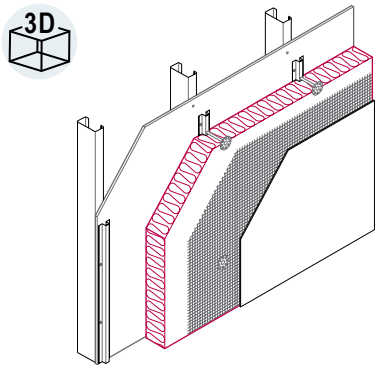

Brick slip cladding

Comprising brick slip cladding fixed to a backing wall.

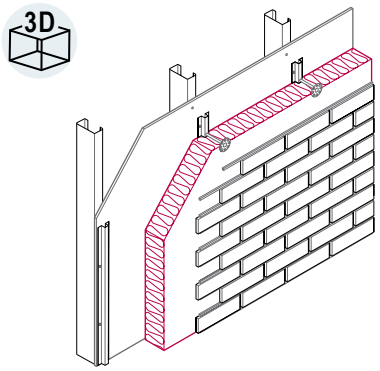

Stone and precast concrete cladding

Stone and precast units should be designed as curtain walling or rainscreen cladding in accordance with this chapter.

Definitions for this chapter

Air barrier	A continuous layer that limits air leakage through the backing wall.
Air cushion	Balancing external and internal air pressure to create a cushion within the air gap.
Air gap	The space between the back of the cladding panels and the external face of the insulation in a rainscreen system.
Backing wall	A framed or masonry wall to which the system is fixed.
Brick slip cladding system	A brick slip system fixed to masonry or framed backing walls, generally supported by a proprietary carrier.
Cavity	The space between the cladding system and the backing wall. The cavity should be adequately drained, and ventilated where required.
Cladding panels	The outer units of a rainscreen cladding system which provide some protection.
Compartmentation	The provision of baffles and cavity closers to form compartments within the air gap of a rainscreen cladding system to equalise pressure.
Curtain walling	A form of enclosure that supports no load other than its own weight and the environmental forces that act upon it, e.g. wind, water and solar.
Curtain walling system	The vertical building enclosure system, including frames, brackets, fixings, flashings, gutters, copings, glass, panels, gaskets and sealant, that forms the assembly.
CWCT	The Centre for Window and Cladding Technology at Bath University.
CWCT Standard	The current Centre for Window and Cladding Technology Standard for systemised building envelopes.
Design life	The period for which materials, products and systems should be designed to be durable, assuming routine inspection and maintenance.
DPC/DPM	Prevents the passage of moisture. In curtain walling terminology, a DPC is often referred to as a DPM.
Façade	The external facing part of the building envelope.
Fire and smoke stopping	Prevention of the transmission of fire and smoke through voids or cavities.
Fixing	Componentry used to attach or secure other components, e.g. curtain walling or a cladding system, to the structure.
Gasket	A compressible material used to form an airtight and/or watertight seal.
In-service performance	The manner or quality of functioning of a material, product or system.
Insulated render system	A cladding system applied externally to an insulating layer which is fixed to a backing wall.
Interstitial condensation	Condensation caused by vapour from within the building condensing on colder surfaces within the wall construction, often occurring due to a cold bridge.
Negative pressure	Where the air pressure on the internal face of the system is greater than that on the external face.
Positive pressure	Where the air pressure on the external face of the system is greater than that on the internal face.
Primary components	Components and parts of the system that are not easily replaceable. These may include: ▪ cladding panels ▪ fixings ▪ framing ▪ insulation ▪ vapour control layers ▪ weathering components.
Pressure equalisation	The creation of an air cushion within the cavity to reduce the amount of water passing through the joints of a rainscreen. Compartmentation and adequately large joints are required to achieve pressure equalisation.
Rainscreen	The part of the assembly, generally the outermost, that prevents the majority of rain from penetrating the wall. Some water may pass through the joints of a rainscreen, but this should be limited by appropriate detailing of open joints or the provision of baffled or labyrinth joints.
Rainscreen cladding system	A façade that provides a barrier to wind and rain and which typically includes a vapour control layer, air barrier, supporting framework and fixings, insulation, breather membrane, cavity/air gap and cladding panels. Traditional tile hanging and timber cladding are not classed as rainscreen cladding systems under the definitions of this chapter.
Replaceable components	Those which are readily replaceable without compromising the design and durability of the building or the need for progressive dismantling of the envelope. Where this cannot be achieved, components should be designed as primary components. A method statement should be provided to demonstrate how components will be replaced with specific reference to accessibility as detailed in this chapter.
Secondary components	Components and parts of the system that are easily replaceable. These may include: ▪ cladding panels ▪ external finishes ▪ glazing and gaskets ▪ internal linings ▪ seals and sealant ▪ window and door furniture.

Separating floors and walls	Floors and walls designed to provide separation between homes.
Slope glazing	A drained and ventilated sloped roofing system.
Systems	For the purposes of this chapter, this term refers to acceptable forms of curtain walling, rainscreen cladding, insulated render systems and brick slip cladding systems.
Spandrel panel	A panel used in place of glazing units to hide the edges of floor slabs, ceiling details, insulation, and other building elements.
Test pressure	The pressure at which testing is conducted.
Vapour control layer	A layer used to restrict the passage of water vapour into the construction to reduce the risk of interstitial condensation.

6.9.1 Compliance

Also see: Chapter 2.1

Curtain walling and cladding systems shall comply with the Technical Requirements.

Curtain walling and cladding that comply with the guidance in this chapter will generally be acceptable.

6.9.2 Provision of information

Designs and specifications shall be produced in a clearly understandable format, include all relevant information and be distributed to appropriate personnel.

Clear and fully detailed drawings should be available on site to enable work to be carried out in accordance with the design. Design and specification information should be issued to site supervisors, relevant specialist subcontractors and suppliers, and include the following information:

- A full set of drawings.
- A schedule of revisions.
- Manufacturer's specification.
- Specific details of all interfaces.
- Fixing schedules.
- Manufacturer's recommendations for proprietary items.
- Details of the on-site testing regime.

6.9.3 Certification

Curtain walling and cladding systems shall be adequately tested, certified and designed in accordance with appropriate standards.

Curtain walling and cladding systems should have certification confirming satisfactory assessment, undertaken by an independent technical authority. Where applicable, certification should be in accordance with CWCT Standard for systemised building envelopes (or a suitable alternative acceptable to NHBC). Independent technical approvals authorities acceptable to NHBC include:

- British Board of Agrément (BBA)
- Building Research Establishment (BRE), or
- certification bodies considered by NHBC to be a suitable alternative.

Certification and test documentation should be:

- made available to NHBC before work begins on site
- used as reference to ensure compliance.

The use of the system should be within the scope of the certification and test documentation.

6.9.4 Loads

Curtain walling and cladding systems, including brackets and fixings, shall allow movement without causing damage or deformation, and safely transfer loads to the building.

Dead loads and live loads should:

- be transferred safely to the building's structure without undue permanent deformation or deflection of any component
- be calculated in accordance with BS EN 1991-1-1 and BS EN 1991-1-4, and take account of internal and external pressures, the location, shape and size of the building.

The following should be accommodated without any reduction in performance:

- Thermal-induced loads due to differential stresses caused by temperature gradients within materials or components.
- Stresses in components and materials (these should not exceed the permissible values recommended by the product manufacturer).
- Movement within the curtain walling or cladding.

Causes of movement include:

- dead and live loads
- changes in temperature
- changes in the moisture content of components
- freezing of retained moisture
- creep.

Allowance for movement should be provided in accordance with the design.

6.9.5 Support and fixings

Curtain walling and cladding systems shall be securely fixed with suitably durable fixings to ensure adequate in-service performance.

The cladding system and associated fixings should be correctly located and securely fixed in accordance with the design and the manufacturer's recommendations. Fixings and supports, including the type, size and positioning of anchors, fixing rails, frames, fixings, fasteners and bracketry, should be in accordance with the design, and:

- accommodate specified loads
- account for packing of brackets to achieve surface tolerance, in accordance with the manufacturer's recommendations
- be accurately set out
- generally be stainless steel, suitable non-ferrous metal or appropriate plastics
- be installed ensuring dissimilar metals are separated to avoid bimetallic corrosion
- be installed ensuring aluminium components are separated from direct contact with cementitious surfaces.

Mechanically fixed systems should be in accordance with the manufacturer's recommendations, and fixings should:

- have the correct embedding, spacing and edge distances
- be installed to the correct torque settings
- have suitable locking nuts and washers.

Fixings should be manufactured from:

- phosphor bronze
- silicon bronze
- BS EN ISO 3506 stainless steel
- mild steel with coatings to BS EN ISO 2081, BS EN 1461, or other appropriate treatment in accordance with BS EN ISO 12944 or BS EN ISO 14713
- BS EN 573 and BS EN 755 aluminium alloy
- appropriate plastics
- materials assessed in accordance with Technical Requirement R3.

Materials that comply with recognised standards and which provide equal or better performance to those above will generally be acceptable to NHBC.

Pull-out or destructive testing of anchors and fixings should:

- comply with BS 5080
- comply with the Construction Fixings Association Guidance Note 'Procedure for Site Testing Construction Fixings'
- be carried out in accordance with the design
- carried out at a frequency agreed with NHBC.

The test report should be made available to NHBC.

Adhesive-fixed systems should be installed to a suitably prepared backing wall, providing:

- an assessment of the backing wall is available to confirm suitability
- it is used in accordance with the design.

Adhesive fixing of rails, frames, fixings and fasteners should:

- only be specified where there is no suitable alternative
- be used in accordance with the manufacturer's recommendations.

Timber should only be used where it is:

- easily inspected and replaced without disturbing the curtain walling system
- treated in accordance with Chapter 3.3 'Timber preservation (natural solid timber)'.

6.9.6 Durability

Also see: Chapter 3.3

Curtain walling and cladding systems shall provide satisfactory durability (subject to routine inspection and maintenance). Timber shall be either naturally durable or preservative treated to provide adequate protection against rot and insect attack.

The system should be designed to avoid the need for disproportionate work when repairing or replacing individual components. In addition:

- primary components should provide satisfactory in-service performance for the design life of the building
- secondary components should provide satisfactory in-service performance for a minimum of 25 years.

The curtain walling system should be constructed with corrosion resistant or adequately protected materials. The risk of bimetallic corrosion should be avoided by the isolation of dissimilar metals.

Systems should not include materials liable to infestation by micro-organisms, fungi, insects or vermin.

6.9.7 Interfaces

Curtain walling and cladding systems shall have suitable interfaces and resist the penetration of water and wind.

The design should indicate the contractor responsible for constructing interfaces.

Interfaces, including those between curtain walling and cladding systems, and those between curtain walling and cladding systems and other elements of the building (e.g. walls, roof, doors and windows), should be carefully designed and detailed to be weather resistant, and prevent moisture reaching parts of the wall that it could adversely affect.

The design should take account of:

- differing profile characteristics
- movement
- continuity of insulation, vapour barriers and breather membranes
- tolerances and deviation
- the erection sequence
- planned maintenance.

6.9.8 Insulation

Insulation shall be suitable for the intended use.

Insulation should be:

- in accordance with the design and the manufacturer's recommendations
- installed correctly to minimise the risk of thermal bridging, surface and interstitial condensation
- securely fixed to the support frame or backing wall with appropriate fixings and/or adhesive in accordance with the manufacturer's recommendations
- returned into window and door openings, and continuous around penetrations through the wall
- neatly cut around fixings and brackets.

Insulation materials should:

- be inert, durable, rot and vermin proof
- not be adversely affected by moisture
- be one of the materials listed in Table 1.

Table 1: Materials for insulation

Insulation type	Relevant standard
Mineral wool	BS EN 13162
FR grade (flame retardant) expanded polystyrene	BS EN 13163
FR grade (flame retardant) extruded polystyrene	BS EN 13164
Rigid polyurethane foam and polyisocyanurate	BS EN 13165
Phenolic foam	BS EN 13166
Cellular glass	BS EN 13167
Other materials	Technical Requirement R3

Reference should be made to BRE document BR135 – 2003 'Fire performance of external thermal insulation for walls of multi-storey buildings' when specifying the type of insulation system to be installed.

Rainscreen cladding

The backing wall should be adequately insulated, particularly at exposed areas. Where open joints are used, a continuous and durable breather membrane should be provided over the outer face of the insulation.

Where the insulation is fixed to the backing wall, a minimum of one non-combustible fixing per 1m² or per insulation batt, whichever is the lesser, should be provided in addition to the other fixings.

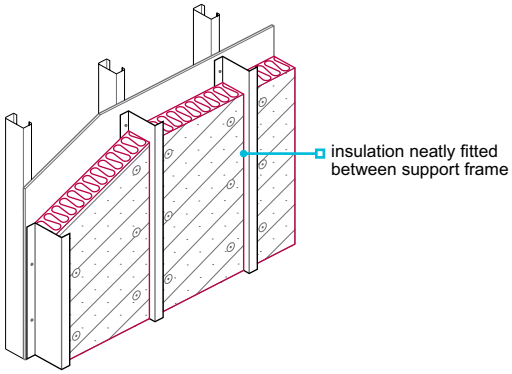

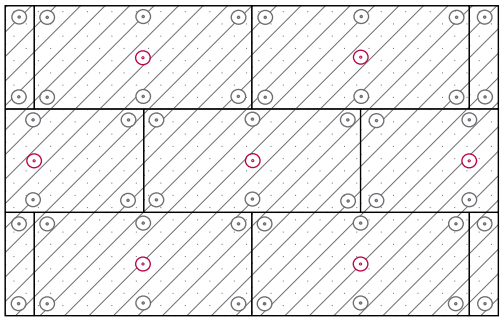

Insulated render

A minimum of one non-combustible fixing per 1m² or per insulation batt, whichever provides the greater number, should be provided in addition to the other fixings. Non-combustible fixings should be fixed through the mesh reinforcement.

Insulation should be suitable to receive the render finish, and keyed where appropriate.

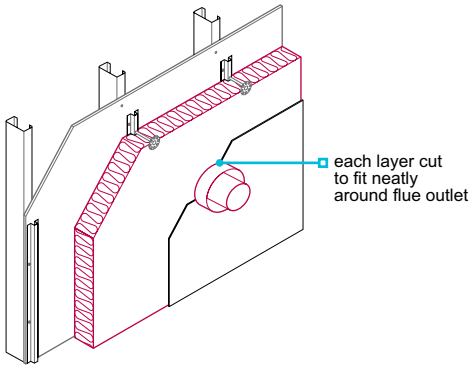

Brick slip cladding

Where the insulation is fixed to the backing wall, a minimum of one non-combustible fixing per 1m² or per insulation batt, whichever is the lesser, should be provided in addition to the other fixings.

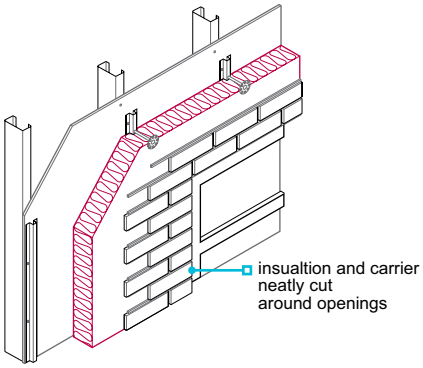

6.9.9 Damp proofing and vapour control

Curtain walling and cladding systems, including damp proofing materials and breather membranes, shall adequately resist the passage of water into the building and allow water vapour to pass outwards.

Damp proofing should:

- be installed correctly to provide a physical barrier to the passage of water, and to ensure water is directed to the outside
- include cavity trays with stop ends at the base of the system, above openings, above cavity barriers, interfaces and other interruptions to the cavity where necessary
- use DPCs/DPMs where necessary, including the junction between the system and any other component or systems
- use only appropriate tapes and sealant (but not solely rely on sealant) in accordance with the design and the manufacturer's recommendations.

For curtain walling systems, the DPC/DPM should extend the full height of the system and have appropriate details at each interface (including floors, walls, roofs, balconies and terraces).

DPCs/DPMs and flexible cavity trays

Damp proofing should be:

- formed from materials which are compatible with adjoining components
- the correct dimensions to suit the detailed design
- constructed from preformed components at complicated junctions.

The following materials are acceptable for use as DPCs/DPMs:

- BS 6515 polyethylene.
- EPDM.
- Neoprene.
- Materials assessed in accordance with Technical Requirement R3.

Flashings

The following materials are acceptable as flashings:

- BS EN 12588 rolled lead sheet (minimum Code 4).
- BS EN 485 and BS EN 573 aluminium and aluminium alloys.
- BS EN 988 zinc alloys.
- Stainless steel.

Breather membranes

Breather membranes should:

- comply with BS 4016 (Type 1 in areas of very severe exposure), or
- be in accordance with Technical Requirement R3.

6.9.10 Installation and tolerances

Also see: Chapter 9.1

Curtain walling and cladding systems shall:

a) be installed by competent operatives

b) be installed to achieve design tolerances and established standards.

Installation

Systems should be installed by operatives who:

- are competent
- are familiar with the system being installed
- hold a certificate confirming that they have been trained by the system manufacturer, supplier or installer.

Tolerances

Systems should be completed, within reasonable tolerances, in accordance with the design, and allowing for the line, level, plumb and plane of the completed wall to be within reasonable tolerances for the materials involved.

6.9.11 Electrical continuity and earth bonding

Curtain walling and cladding systems shall ensure electrical continuity and earth bonding.

Curtain walling and rainscreen cladding should comply with:

BS 7671	'IET Wiring Regulations Requirements for Electrical Installations', formerly 'IEE Wiring Regulations'.
BS EN 62305	'Protection against lightning. General principles'.
BS EN 62305-3	'Physical damage to structures and life hazard'.

6.9.12 Maintenance

Curtain walling and cladding systems shall have appropriate access arrangements for the purposes of cleaning, inspection, maintenance and repair.

Provision should be made for safe future access to the façade. Access should generally be provided from a safe working platform, such as a cradle or mobile elevating platform.

Appropriate arrangements should be made for the replacement of failed insulating glass units without incurring excessive costs for gaining access.

6.9.13 Glazing, gaskets and sealants

Glazing shall be carried out in accordance with relevant standards. Materials used for glazing, gaskets and sealants shall provide satisfactory performance.

Glazing, including insulating glass units, should be in accordance with Chapter 6.7 'Doors, windows and glazing'.
Extruded rubber gaskets should comply with BS 4255 or assessed in accordance with Technical Requirement R3.

Sealant and tapes should be selected and applied in accordance with:

- BS 6213
- BS EN ISO 11600.

Sealant used in locations where differential movement may be expected, e.g. interfaces between the façade and the structure, should be one of the following:

- One or two part polysulphide.
- One part silicone.
- One or two part polyurethane.
- Materials assessed in accordance with Technical Requirement R3.

6.9.14 Cavity barriers and firestops

Materials used for cavity barriers and firestops shall be capable of producing adequate resistance to fire and smoke.

Materials are acceptable where they are:

- specified in building regulations
- assessed in accordance with Technical Requirement R3.

Systems incorporating proprietary intumescent materials should follow the guidance provided by:

- the Intumescent Fire Seals Association (IFSA)
- the Association for Specialist Fire Protection (ASFP).

6.9.15 Ventilation screens

Ventilation openings shall be protected from the entry of birds and animals.

Where openings are larger than 10mm, a screen to prevent birds and animals entering the cavity should be provided:

- in accordance with the design
- at the top and bottom of the rainscreen
- at penetrations through the cladding.

6.9.16 Handling and storage

Materials, products and systems shall be protected and stored in a satisfactory manner to prevent damage, distortion, uneven weathering and degradation.

The handling and storage of curtain walling or cladding system should ensure:

- components are transported, lifted, handled and stored in accordance with the manufacturer's recommendations
- insulated glass units are carefully stored and protected in a sheltered dry area.

Practical steps should be taken to avoid the risk of damage to the curtain walling or cladding system during construction.

6.9.17 Curtain walling

Curtain walling shall ensure adequate in-service performance. Issues to be taken into account include:

a) acoustic performance
b) weather resistance
c) thermal bridging condensation
d) air infiltration
e) opening doors and lights
f) off-site testing
g) site testing.

Acoustic performance

Noise from the curtain walling system caused by loads, movements and changes in the environmental conditions should be accommodated without being intrusive.

The curtain walling system should be designed to resist the passage of airborne and impact sound within the building. To reduce flanking transmission, precautions may be required at the:

- edges of separating floors
- outer ends of separating walls
- outer ends of partition walls
- junctions with roof constructions and parapets.

Weather resistance

Curtain walling systems should have:

- external and internal air and water seals with a drained and ventilated cavity at each interface
- drained and ventilated glazing rebates including gaskets and seals.

The following illustrations show typical interfaces and general design principles:

Figure 1: Curtain walling to insulated render system: horizontal section

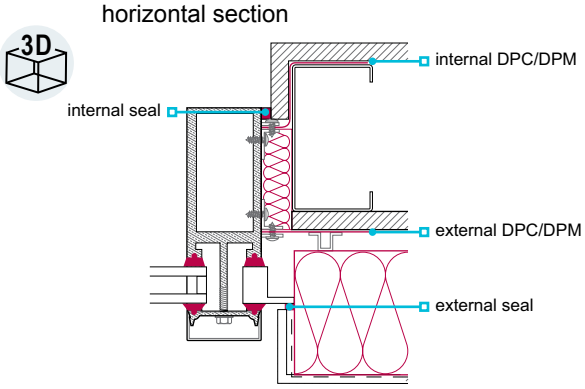

Figure 2: Curtain walling to balcony/terrace: vertical section

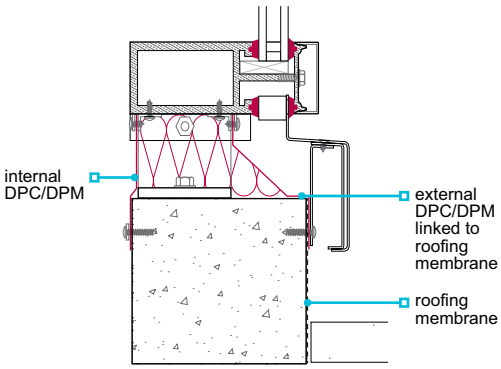

Figure 3: Curtain walling to conventional brick and block wall: horizontal section

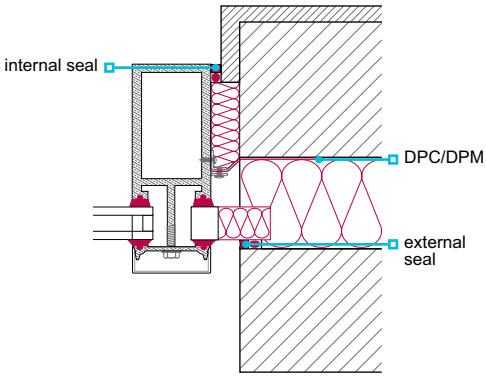

Figure 4: Curtain walling to soffit: vertical section

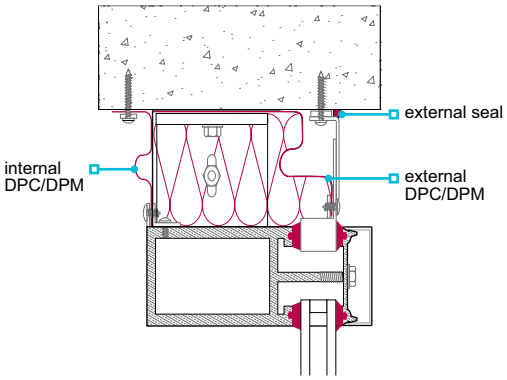

Figure 5: Curtain walling to roof, including coping detail: vertical section

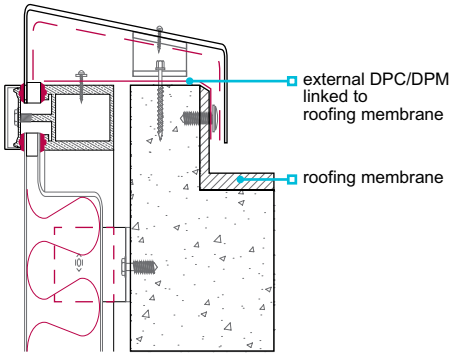

Thermal bridging and condensation

The design and construction of curtain walls should:

- ensure interfaces are adequately insulated and installed in accordance with the design
- minimise the risk of surface and interstitial condensation by providing thermal breaks and a continuous and durable vapour control layer in accordance with the design
- ensure thermal bridging is controlled so that no part of the curtain wall is more at risk from surface condensation than the glazing.

Air infiltration

Curtain walling systems should be sealed with preformed factory-moulded 'picture frame' type vulcanised EPDM or silicone internal gaskets. Gaskets and sealants should:

- be used to resist the flow of air from the outside to the interior surface of the curtain walling system
- comply with BS 6213 and be used in accordance with manufacturer's recommendations.

Particular attention should be given to the interfaces between the curtain walling system and the walls, roof, doors, windows and cladding system.

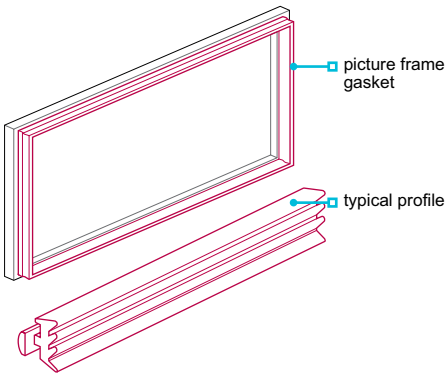

Opening doors and lights

Opening doors and lights should:

- hang square within the curtain wall frame
- fit neatly and with minimal gaps to ensure effective weatherproofing.

Off-site testing

Air and water testing of the 'prototype' curtain walling system should be carried out in accordance with, and pass, the CWCT Standard (test sequence A or B), when tested at a test pressure of 600 pascals. Panels tested should be of a similar size and configuration to those to be used on the building.

Where the maximum calculated design wind pressure is above 2400 pascals, the test pressure should be increased to 0.25 x the design wind pressure.

The 'prototype' should remain watertight during and after the test.

At a test pressure of 600 pascals, an air infiltration rate no higher than 1.5m^3/hr/m^2 for fixed glazed panels is permissible, provided there is no evidence of concentrated leakage.

Wind resistance, serviceability and safety testing should be carried out in accordance with the CWCT Standard.

Site testing

Site testing should:

- be conducted to determine resistance to water penetration, including joints and interfaces which are intended to be permanently closed and watertight
- ensure a representative sample of the finished installation is hose tested in accordance with the current CWCT Standard for curtain walling
- ensure a minimum of 5% of the completed curtain walling system is tested, especially in vulnerable areas such as joints and interfaces.

Other testing may be acceptable where it is considered to be a suitable alternative by NHBC.

The results of the test should be made available to NHBC.

6.9.18 Rainscreen cladding

Rainscreen cladding systems shall ensure adequate in-service performance. Issues to be taken into account include:

a) acoustic performance
b) weather resistance
c) thermal bridging and condensation
d) air infiltration
e) compartmentation
f) certification
g) site testing.

Acoustic performance

Noise from the rainscreen cladding system caused by rain striking the outer surface of panels should be accommodated without being intrusive through the use of material that is:

- noise absorbing, or
- anti-drumming.

Weather resistance

To ensure moisture is directed to the outside, DPC/DPM arrangements should be correctly formed with suitable upstands and stop ends, including at the junction between the rainscreen cladding and any other component or system. External and internal air and water seals and a drained cavity should be provided at all interfaces.

The air gap between the face of the insulation and the back of the panels should be of sufficient width and have suitably sized drainage, allowing any water passing the joints to:

- run down the back of the rainscreen panels
- be discharged externally without wetting the insulation or the backing wall.

Free drainage

Air gaps should be adequately ventilated and the following minimum widths maintained behind all rainscreen panels:

- 50mm for panels with open joints, or
- 38mm for panels with baffled or labyrinth (rebated) joints.

Open, baffled or labyrinth (rebated) joints should have a minimum 10mm opening, unless specified otherwise.

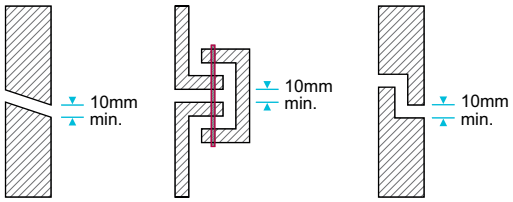

Thermal bridging and condensation

The system should:

- be designed to minimise the risk of thermal bridging, surface and interstitial condensation
- be assessed using a BS 5250 condensation risk analysis
- generally include a vapour control layer fixed to the warm side of the wall insulation.

Air infiltration

Before installation of the system, the backing wall should be reasonably airtight with:

- masonry walls jointed to a high standard, i.e. each joint filled
- framed walls, including a rigid sheathing on the cavity face, with each joint taped or sealed.

Where reasonable airtightness cannot be achieved:

- a separate continuous vapour permeable air barrier should be provided on the outer face of the backing wall
- joints should be taped or sealed.

Compartmentation

Rainscreen cladding systems that have open joints between the panels should be designed to be pressure equalised. The cavity should be compartmented by:

- a horizontal cavity closer at each floor level
- vertical cavity closers at centres not exceeding 6m
- vertical cavity closers at centres not exceeding 1.5m within 6m of an internal or external corner
- a vertical cavity closer as close as possible to an external corner, generally within 300mm.

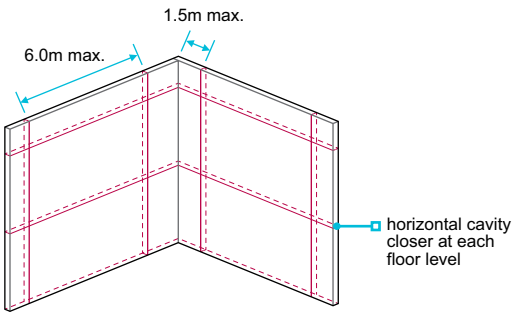

The NHBC Standard for compartmentation is in addition to building regulations (to control the spread of smoke and fire), but may be used for the same purpose.

Cavity closers should:

- be rigid and installed in accordance with the manufacturer's recommendations
- enable ventilation and drainage to be maintained in accordance with the design.

Certification

Rainscreen cladding systems, including panels, should have current certification confirming satisfactory assessment by an appropriate independent technical approvals authority accepted by NHBC.

Site testing

On-site hose or sparge bar testing should be carried out with emphasis on interfaces that are designed to be permanently closed and watertight.

The building should remain watertight during and after the test.

6.9.19 Insulated render and brick slip cladding

Also see: Chapter 6.2

Insulated render and brick slip cladding shall be designed and installed to ensure adequate in-service performance. Issues to be taken into account include:

a) weather resistance
b) thermal bridging and condensation
c) air infiltration
d) insulated render: reinforcement and render
e) brick slip cladding: slips, carriers and joints.

Weather resistance

Timber and steel framed backing walls should have a cavity between the wall and the insulation which is:

- a minimum of 15mm wide
- drained and vented (for timber frame)
- drained (for steel frame).

A cavity can increase the risk of damage from impact, especially at low level, around balconies and where cradle systems etc. can come into contact with the façade. Suitable precautions to resist impact damage should be provided e.g. by the provision of a rigid board behind the insulation whilst maintaining the cavity.

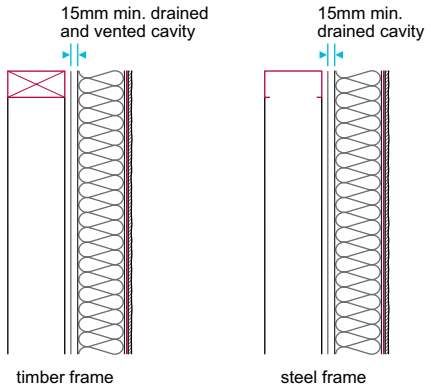

The following illustrations show typical interfaces and general design principles:

Figure 6: Insulated render system to windows and doors: horizontal section

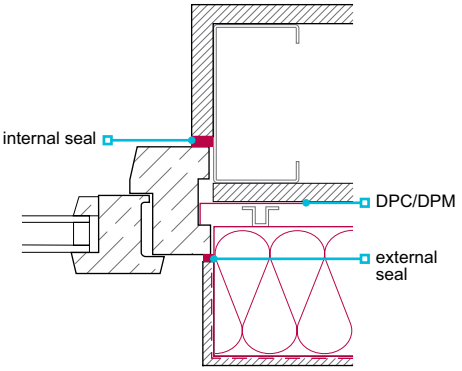

Figure 7: Penetration of gas flue through insulated render system on light gauge steel frame: horizontal section

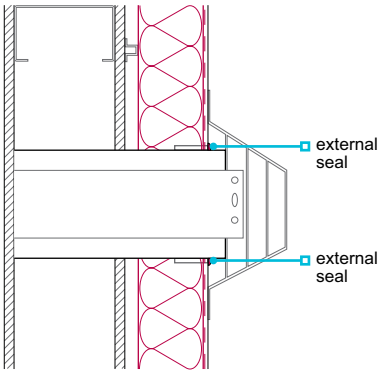

Figure 8: Brick slip cladding to insulated render system: horizontal section

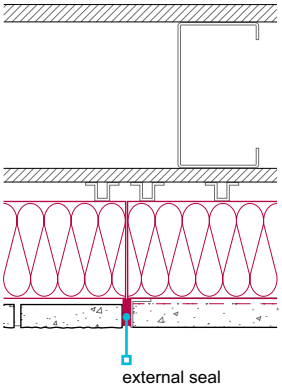

Movement joints in the backing wall should be:

- continued through the insulated render system
- formed in accordance with the manufacturer's recommendations.

Thermal bridging and condensation

The system should:

- be designed to minimise the risk of thermal bridging, surface and interstitial condensation
- be assessed using a suitable condensation risk analysis
- generally include a vapour control layer, fixed to the warm side of the wall insulation.

Air infiltration

Before installation of the system, the backing wall should be reasonably airtight with:

- masonry walls jointed to a high standard, i.e. each joint filled
- each joint taped or sealed on framed walls, including a rigid sheathing on the cavity face.

Insulated render: reinforcement and render

Reinforcement should:

- be detailed in the design and be in accordance with the manufacturer's recommendations
- be formed with appropriate trim at openings, corners, angles, interfaces and movement joints
- include additional mesh where there may be increased stress in the render system, i.e. at the corners of window or door openings
- be lapped to a minimum of 100mm.

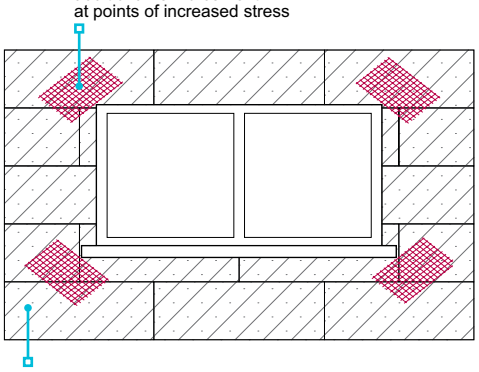

Render should:

- not be applied where the surface has contamination, dust or loose particles
- have the appropriate number and thickness of coats in accordance with the manufacturer's recommendations
- be mixed to ensure colour consistency where coloured pigments are specified
- be specified and used with the appropriate trims to form corners, returns and features in accordance with the manufacturer's recommendations.

Brick slip cladding: slips, carriers and joints

Brick slip systems, including proprietary carriers forming an integral part of the system, should:

- be specified and fixed in accordance with the design and the manufacturer's recommendations, taking account of relevant height restrictions
- be set out and designed to ensure that excessive cutting of brick slips is avoided, i.e. in the storey heights, at corners and around openings
- have coursing arranged to suit lintel heights.

Mortars, proprietary mortars and grouts should be specified:

- to enable each joint to be adequately filled and appropriately struck
- in accordance with the system manufacturer's recommendations.

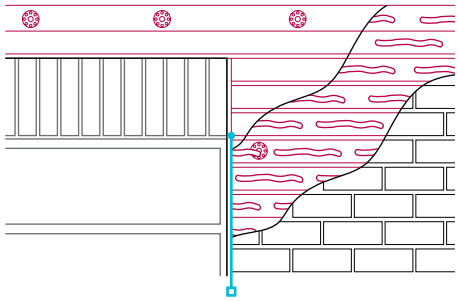

Light steel framed walls and floors

CHAPTER 6.10

This chapter gives guidance on meeting the Technical Requirements for light steel framed walls and floors and:

- **applies specifically to 'warm frame' construction using 0.45-3.2mm thick framing**
- **does not apply to light steel framed walls used in basements.**

6.10.1	Compliance	01
6.10.2	Provision of information	01
6.10.3	Structural certification	01
6.10.4	Structural design of load-bearing floors and walls	03
6.10.5	Structural design of infill walls	05
6.10.6	Roofs	05
6.10.7	Steel and fixings	06
6.10.8	Detailing of steel joists	07
6.10.9	Restraint	08
6.10.10	Construction of load-bearing walls and external infill walls	08
6.10.11	Interfaces with staircases	09
6.10.12	Fixing floor decking and ceilings	10
6.10.13	Other design issues	10
6.10.14	Behaviour in relation to fire	10
6.10.15	Acoustic performance	11
6.10.16	Moisture control	11
6.10.17	Insulation	12
6.10.18	Vapour control layers	13
6.10.19	Breather membranes	13
6.10.20	Cladding, lining and sheathing boards	14
6.10.21	Wall ties	15
6.10.22	Services	16
6.10.23	Further information	16

NHBC

Raising Standards. Protecting Homeowners

Definitions for this chapter

Differential movement	Movement between the frame and cladding, e.g. due to thermal expansion, shrinkage (in concrete masonry) and moisture expansion (in clay masonry).
External infill	Walls which are built between the floors of steel or concrete frames and are designed to resist wind loading and to support the weight of the other wall components. They do not provide stability to the building or resist floor loading. External infill is considered as a secondary structural component.
Hybrid construction	Cavity construction where insulation is installed both between the studs and on the cavity side of the steel frame.
LSF	Light steel frame. In this chapter, 'LSF' refers to construction framing members made from cold-formed profiles 0.7-4.0mm thick.
Primary structural components	Elements of the structure designed to carry and transfer primary loads of the building as a whole, including self-weight, dead loads and live loads.
Secondary structural components	Elements of the structure which do not play a wider role in the structure, but carry loads directly imposed on them (and transfer them to the primary structure) such as self-weight, wind loads, cladding and openings.
Sheathing	Board applied to the outside of the steel frame (installed where required by the design).
Warm frame	Cavity construction where insulation is installed on the cavity side of the steel frame.

6.10.1 Compliance

Also see: Chapter 2.1

LSF structures shall comply with the Technical Requirements.

LSF structures (i.e. walls, roofs and floors) that comply with the guidance in this chapter will generally be acceptable.

LSF structures may be:

- structurally independent (primary) and used to form whole buildings, additional storeys, annexes, extensions, penthouses, etc.
- infill walls (secondary), or
- bespoke facades (where support may be required from other structural elements).

Construction should be 'warm frame' or 'hybrid' construction, with sufficient insulation outside the steel envelope to ensure that condensation does not occur within the depth of the light steel members.

Stud partitions are considered in Chapter 6.3 'Internal walls'. LSF systems that do not comply with the principles of this chapter should be assessed in accordance with Technical Requirement R3.

Where the components of the LSF cannot be inspected on site (e.g. closed panels or fully fitted-out volumetric units), the system should be subject to review by NHBC. Please refer to the MMC Hub at **www.nhbc.co.uk/MMCHub**.

6.10.2 Provision of information

Designs and specifications shall be produced in a clearly understandable format, include all relevant information and be distributed to all appropriate personnel.

Clear and fully detailed drawings should be available on site to enable work to be carried out in accordance with the design. Designs and specifications should be issued to site supervisors, relevant specialist subcontractors and suppliers, and include:

- a full set of drawings and material specifications
- a typical wall build-up, including wall ties, breather membranes, sheathing and vapour control layers, where applicable
- fixing schedules and details of each connection that is to be made on site
- details of connections with other building elements, including roofs, floors and openings
- information on integration of services and work of subsequent trades
- positions and materials for fire stops and cavity barriers in accordance with relevant building regulations
- the number and spacing of bolts, screws and rivets
- the manufacturer's recommendations relating to proprietary items
- details of how wall panels are to be fixed to the substructure, adjacent panels, and floor and roof framing
- the specification for each type of fixing, including corrosion protection.

6.10.3 Structural certification

*Contact us: **technical@nhbc.co.uk***

The LSF system shall be adequately tested and certified. The design of superstructures with primary structural components formed from LSF shall be checked by an NHBC registered LSF certifier.

Primary structural components formed from LSF require two-stage certification confirming that both the system and the project have been checked. External infill does not require Stage 1 and 2 certification (see Clause 6.10.5).

Stage 1 – system certification

NHBC requires manufacturers of LSF systems, which form primary structural components, to submit a system manual to the Steel Construction Institute (SCI) for assessment. The manufacturer is the company which assembles the steel frame sections to form the wall and/or floor panels. If in doubt, consult NHBC Standards, Innovation and Research.

The manual should contain the information described in Table 1. Further performance issues may be considered at the discretion of SCI and the manufacturer (see Table 7).

Table 1: Items included in the system manual

Topic	Description
Description of system	■ Key features
Application	■ Usage, e.g. maximum number of storeys and type of cladding
Durability	■ Demonstrate that design life is at least 60 years (including environment category) ■ Grade of steel ■ Corrosion protection ■ Supplementary protection
Strength and stability	■ Structural design philosophy (including codes of practice referenced and test reports) ■ Grade of steel (traceability) ■ Section properties ■ Loading ■ Ultimate limit state ■ Serviceability limit state ■ Resistance to overturning ■ Racking resistance ■ Holding down ■ Connections within the system ■ Connections with other building elements ■ Structural integrity ■ Positions and sizes of holes through members
Additional checks where LSF is used in volumetric construction	■ Module-to-module connections (strength as well as accuracy) ■ Module-to-foundation connections ■ Rigidity in transportation ■ Lifting

Where there are various configurations (e.g. types of claddings), the manufacturer will need to specify which options SCI is to consider in its assessment. Upon satisfactory completion, SCI will approve the manufacturer's system manual and issue a numbered 'system certificate' which includes:

- a detailed description of the system
- details of usage limitations
- information for reference by the designer and steel frame project certifier.

Stage 2 – project certification

The design of all primary structural components should be subject to a Stage 2 certification check by an NHBC registered LSF certifier.

The LSF certifier should:

- be listed on NHBC's list of LSF certifiers
- be a suitably qualified and experienced civil or structural engineer with appropriate professional indemnity insurance
- not be the designer of the LSF or be employed by the same practice
- check supporting details and calculations
- ensure the Stage 1 system certificate is valid and current
- ensure that the proposals are in accordance with the manufacturer's Stage 1 system certificate (issued by SCI) and this chapter
- provide confirmation that the requirements have been satisfied for the project
- provide the registered builder with the completed and signed project certificate confirming assessment of structural adequacy for each specific project.

The registered builder should ensure that the completed Stage 2 certificate is available on site for inspection by NHBC.

Contact NHBC Standards, Innovation and Research:

- if you require contact details of frame certifiers, or
- to apply to become an LSF certifier.

6.10.4 Structural design of load-bearing floors and walls

LSF floors and walls shall be designed to support and transfer loads safely and without undue movement. Issues to be taken into account include:

a) structural floors
b) structural walls
c) overall stability.

Structural floors

Floors should:

- be of the correct type
- be fitted in the specified location
- have suitably sized trimmers around floor openings
- have a typical maximum joist spacing of 600mm, although greater spacings may be applied when designed by an engineer in accordance with Technical Requirement R5 or covered by an SCI system-specific Stage 1 assessment with the project-specific application reviewed and checked by an NHBC registered LSF certifier.

Light steel joists should be fixed to supporting walls by either:

- web cleats
- 'Z' or 'L' hangers
- a track connection
- direct attachment to wall studs, or
- bearing onto the supporting structure (bearing stiffeners may be required).

Joist support cleats should:

- be of the correct type
- be fitted in the specified location
- use fixings as specified in the design.

Where required, web stiffeners should be properly fitted.

Where joists are fitted directly to light steel wall studs, pre-drilled holes should be correctly aligned before making the final connection.

Fixing holes should not be enlarged, and additional holes should not be cut without prior approval of the designer.

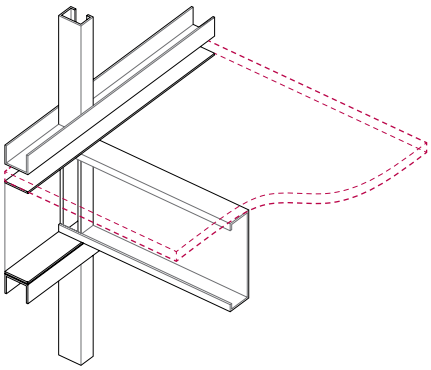

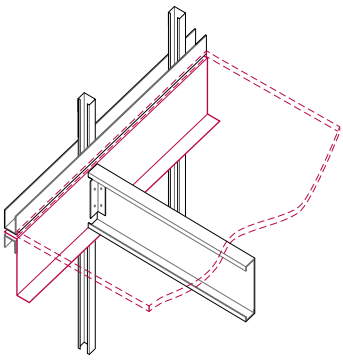

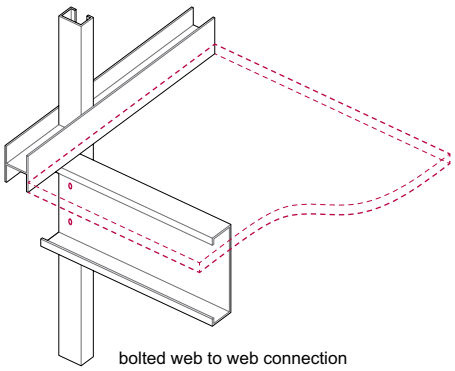

bolted web to web connection

Static criteria for the maximum permissible deflection of a single joist due to:

- imposed load, limited to (span/450)
- dead and imposed loads, limited to the lesser of (span/350) or 15mm.

Dynamic criteria:

- The natural frequency of the floor should be limited to 8Hz for dead load plus 0.2 x imposed load; this can be achieved by limiting the deflection of a single joist to 5mm for the given loading.
- The deflection of the floor (i.e. a series of joists plus the floor decking) when subject to a 1kN point load should be limited to the values in Table 2.

Table 2: Deflection with point loads of 1kN

Span (m)	Maximum deflection (mm)
3.5	1.7
3.8	1.6
4.2	1.5
4.6	1.4
5.3	1.3
6.2	1.2

The deflection of a single joist is dependent on the:

- overall floor construction
- number of effective joists that are deemed to share the applied 1kN point load (typical values are given in Table 3).

Table 3: Typical values

Floor configuration	Number of effective joists	
	400mm joist centres	600mm joist centres
Chipboard, plywood or oriented strand board	2.5	2.35
Built-up acoustic floor	4	3.5

Light steel ground floor construction

Provision should be made to prevent ground moisture affecting light steel floors. This can be achieved by covering the ground below the floor with either:

- 50mm oversite concrete or 50mm fine aggregate on 1200 gauge (0.3mm thick) polyethylene membrane laid on 50mm sand blinding, or
- 100mm oversite concrete on a compacted clean, inert hardcore bed. Where necessary, this concrete should be protected against sulfate attack by the use of a lapped polyethylene DPM, not less than 1200 gauge (0.3mm thick) or 1000 gauge where assessed in accordance with Technical Requirement R3.

Floors should have a 150mm minimum void below the floor which is ventilated by:

- openings on at least two opposite sides
- 1500mm^2 per metre run of external wall or 500mm^2 per m^2 of floor area (whichever provides the largest area).

Where there is shrinkable soil, heave can occur. The minimum underfloor void ventilation requirement should be increased as follows:

- High potential – 150mm (300mm total)
- Medium potential – 100mm (250mm total)
- Low potential – 50mm (200mm total).

See Chapter 4.2 'Building near trees' for definitions of high, medium and low volume change potential.

For concrete ground floors refer to Chapters 5.1 'Substructure and ground-bearing floors' and 5.2 'Suspended ground floors'.

Concrete upper floors

Concrete floors may be used with LSF and may be constructed using either thin precast units or in-situ concrete placed on steel decking. The deflection of simply supported composite floors should be limited to take account of the long-term effects of creep and shrinkage. Composite floors should be appropriately propped until the concrete reaches the required strength and should not be overloaded during construction. Guidance can be found in Section 6.3 of SCI publication P402 'Light steel framing in residential construction'.

Structural walls

The structural design of the building should ensure adequate resistance to loadings including dead loads, imposed loads, wind loads and snow loads, in accordance with:

- BS EN 1991-1-1
- BS EN 1991-1-3
- BS EN 1991-1-4.

Further guidance on deflection limits can be found in SCI guidance P402 'Light steel framing in residential construction'.

Individual studs should generally:

- be sized to meet structural requirements, allowing for board fixings at joints and construction tolerances
- have a maximum spacing of 600mm
- consider deflection if not designed to carry vertical loading from the primary structure.

Alternative stud arrangements should be agreed with NHBC.

Lintels, including trussed lintels, should be:

- provided to any opening in load-bearing panels where one or more studs is cut or displaced to form the opening, but are not required where an opening falls between studs
- securely fixed to supporting studs to ensure that loads are fully transferred.

At openings, additional studs may be required to provide support or fixing points for wall ties, cladding and wall linings.

Multiple studs should be included to support multiple joists, unless otherwise specified by the designer.

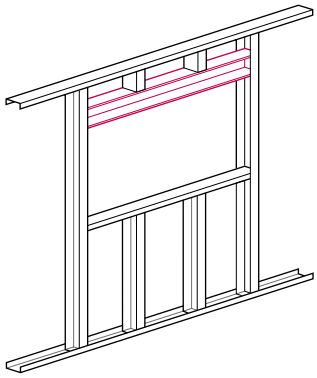

Where panels are diagonally braced with a flat strip, the brace should be fixed to each stud at the intersection to minimise bowing in the bracing member. Alternatively, bracing may be tensioned using alternative methods where included in the scope of the Stage 1 certification.

Appropriate holding-down devices should be provided to resist uplift, where necessary. The anchorage for holding-down devices should have sufficient mass to resist the uplift forces (See Clause 6.10.10).

Where roof trusses sit directly on a top track, the design should consider all loads, such as:

- wind uplift
- lateral support
- vertical loading (assuming that trusses may be offset from studs).

Where included in the design, timber wall plates should be:

- fixed to the head rail of wall panels onto which timber roof trusses bear
- sized (including the head rail) to permit single timber trusses to be positioned at any point between studs.

Allowance for movement, including at openings and penetrations, should:

- prevent load transfer onto services or flues
- consider elastic shortening of the LSF and movement potential of any panels, cladding or boards
- be fully coordinated with the whole building design.

Overall stability

Methods to provide overall stability should either:

- be designed to BS EN 1993-1-1, or
- be tested to BS EN 594.

Wall panels may provide stability using one or more of the following techniques:

- internal bracing
- crossed flat bracing
- external sheathing board in accordance with Clause 6.10.20
- rigid frame action.

Internal lining boards can be used where demonstrated to be suitable for the purpose.

6.10.5 Structural design of infill walls

Infill walls shall be designed to support and transfer loads to the structure safely and without undue distortion or movement.

Infill panels should be designed to resist the expected wind loads, any loads transferred by the cladding system, and those imposed by windows and doors within the panels. Load concentrations resulting from the presence of openings should also be considered. The design should be in accordance with BS EN 1993-1-3. Additional information can be found in SCI publication ED017 'Design and installation of light steel external wall systems'.

6.10.6 Roofs

Also see: Chapters 7.1 and 7.2

Roofs supported by LSF constructions shall be designed to support the roof coverings and transfer loads safely and without undue movement.

Connections between LSF walls and timber or LSF pitched roofs require careful consideration in the design.

LSF pitched or flat roofs should only be used in warm-roof or hybrid construction, i.e. with insulation over rafters (or joists in flat roofs).

Condensation risk should be considered in accordance with BS 5250.

6.10.7 Steel and fixings

Steel and fixings shall be suitable for the intended use. Issues to be taken into account include:

a) steel grade
b) protection against corrosion
c) connections and fixings
d) holes and notches.

Steel grade

Steel should be in accordance with BS EN 10346 and of any of the following grades:

- S280
- S320
- S350
- S390
- S420
- S450.

Protection against corrosion

All steel should be pre-galvanised in accordance with BS EN 10346 (minimum 275g/m^2 zinc coating (Z) or 150g/m^2 aluminium-zinc alloy coating (AZ)). Structural steel members should not be altered without the approval of the designer. Welded zones should be cleaned and treated with a zinc-rich paint to prevent corrosion.

The junction between the ground floor joists and their support should be designed to maintain the durability of the floor. Light steel floor joists and ring beams in ground floors should be galvanised to 450g/m^2.

Alternatively, they can be galvanised to 275g/m^2 with additional protection of a two-coat bitumen-based coating to BS 1070, BS 3416 or BS 6949, or have a two-coat liquid asphaltic composition applied. Ring beams to ground floors should be totally protected, and joists protected for a minimum of 300mm adjacent to an external wall support or ring beam.

Where steel is used less than 150mm above ground level the guidance in Clause 6.10.16 should be considered.

Connections and fixings

Where two metals are to be joined, they should either be:

- compatible and not cause bimetallic corrosion, or
- isolated from each other.

Connections should be:

- properly installed
- securely made by clinching, crimping or by one of the methods detailed in Table 4
- justified in accordance with BS EN 1993-1-3 or a test method acceptable to NHBC.

Table 4: Types of connections

Type of connection	Relevant standard
Cleats	BS EN 1993-1-1
Countersunk bolts (tightened to the correct torque)	BS 4933
Hot-dip galvanised fasteners	BS EN ISO 10684
Rivets, including self-piercing rivets	Manufacturer's recommendations
Screws	BS EN ISO 10666 BS EN ISO 15480 BS EN ISO 15481 BS EN ISO 15482 BS EN ISO 15483 (also see BS EN ISO 4042)
Welded connections	BS EN 1011 and BS EN 1090
Zinc-plated bolts	BS 7371-3

Holding-down devices

Holding-down devices should be suitable for the environment they will be exposed to, and manufactured from:

- mild steel with zinc coating to BS EN ISO 1461
- stainless steel to BS EN 10095 (suitable for most environments).

Holes and notches

Joists and studs should not be altered without the approval of the steel frame designer, and the drilling, cutting or punching through of members shall only be undertaken to an engineer's design in accordance with Technical Requirement R5.

To prevent damage to services, holes and penetrations should be fitted with grommets or swaged under factory conditions.

End notching of light steel joists may be required for the interconnection of trimming joists and should be in accordance with the design. Notches elsewhere in the span are not acceptable.

Also see Clause 6.10.22.

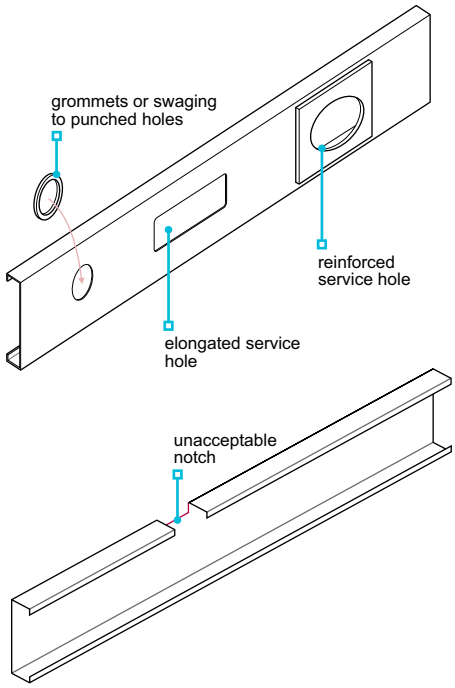

6.10.8 Detailing of steel joists

Steel joists, fixings and connections shall be suitably detailed and provide satisfactory performance. Issues to be taken into account include:

a) installation details

b) prevention of roll.

Installation details

Joists or floor beams should be:

- spaced as shown in the design
- accurately cut to length in accordance with the manufacturer's recommendations to ensure a tight fit
- joined with the correct type, size and number of fixings.

Where light steel joists are supported by steel joists, cleats or web stiffeners should be used in accordance with the design.

Joists may be doubled up to support partitions or to form trimmers.

Continuous joists on load-bearing intermediate walls should be reinforced as required by the design.

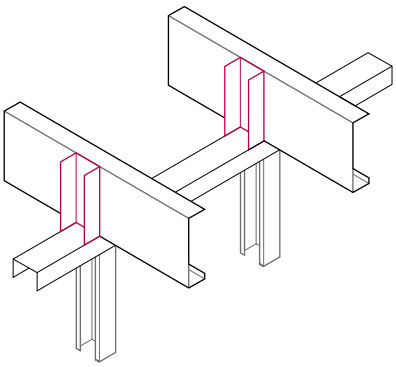

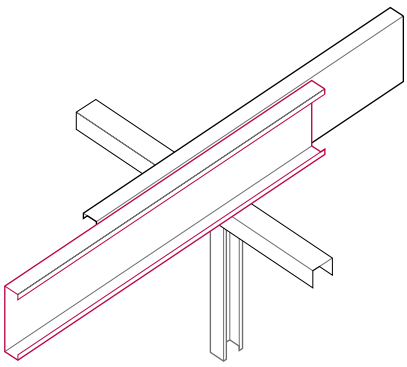

Where joists overlap on load-bearing intermediate walls, they should be fixed together with bolts or screws. This is to prevent the floor decking being pushed up, or the ceiling being cracked, when the cantilevered part of the joist moves upwards.

Prevention of roll

Bridging and blocking should be provided in accordance with the design to prevent roll.

Floors constructed using joists with an asymmetric web, e.g. of C or Sigma profile, can cause the floor to roll. To avoid roll, unless otherwise specified in the design, one of the following alternatives should be used where the span exceeds 3.5m for C joists or 4.2m for Sigma joists:

- A continuous line, or lines, of proprietary steel herringbone struts provided between the joists; the pairs of struts should have a physical gap between them so that they do not rub against each other at the cross-over point and create noise.
- Solid blocking provided to every alternate pair of joists with ties between them as shown.
- Joists alternately reversed and tied together in pairs.
- Joists alternately reversed and continuous ties (e.g. resilient bar) fixed to the joist flanges.

Where joists bear onto steelwork or are supported by cleats, blocking is not necessary adjacent to the supports.

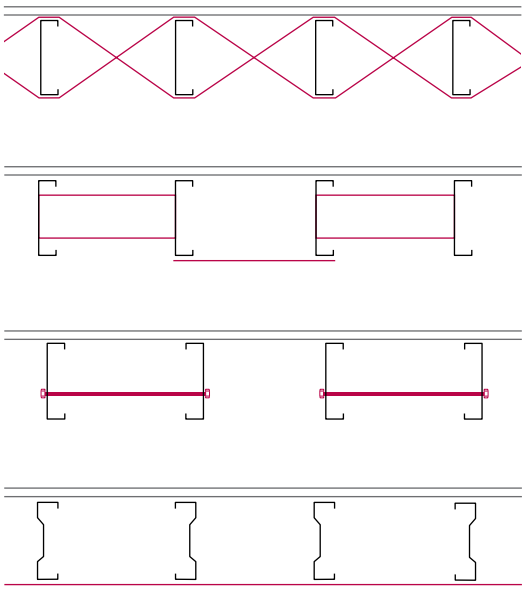

6.10.9 Restraint

Restraint strapping shall be provided in accordance with the design.

Where external walls, not constructed from LSF, are to be stabilised by a connection to the floor, straps may be required. Straps will generally be fixed to the web of the joist, to suit the masonry courses.

Where joists run parallel to the wall, straps should be supported on noggings fixed between the joists. Straps should be placed at a maximum of 2m apart and carried over three joists. Packing should be provided between the wall and the first joist.

Straps should be fixed with suitable bolts, screws or rivets and should bear on the centre of bricks or blocks, not across mortar joints.

6.10.10 Construction of load-bearing walls and external infill walls

Construction of load-bearing walls and external infill walls shall ensure adequate stability. Issues to be taken into account include:

a) preparation
b) anchoring
c) accommodation of deflection.

Preparation

The following should be in accordance with the design:

- The setting out of the structure onto which the LSF is to be erected.
- The transfer of loads from the LSF.

The supporting structure may have local deviations in level along its length, and packing will be required to achieve the required tolerances and to provide for effective load transfer.

Concrete kickers should be carefully formed, ensuring that the concrete is adequately compacted and the top surface is suitably flat and level.

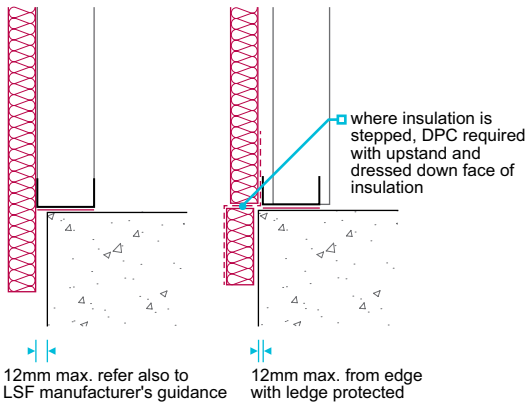

Table 5: Acceptable methods of packing under frames

Gap under base rail	Acceptable packing
Less than 10mm	Provide shims under each stud position.
10-20mm	Provide shims under each stud position, and grout under the whole length of the base rail with cement: sand mortar.
More than 20mm	Obtain advice from the frame designer/manufacturer. Remedial work to the substructure may be required before erection commences.

Shims should be of pre-galvanised steel or other suitable material, e.g. not timber.

Wall frames should be checked to ensure that they are dimensionally accurate before erection commences.

LSF should be correctly positioned, square and plumb, and within the following tolerances:

- the vertical position of members should be within +/-5mm per storey relative to the base
- the horizontal position of base rails should not vary in alignment by more than 5mm in 10m.

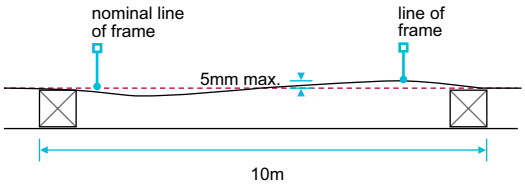

Anchoring

The frame should be anchored to resist both lateral movement and uplift in accordance with the design, including bolt-down brackets where required.

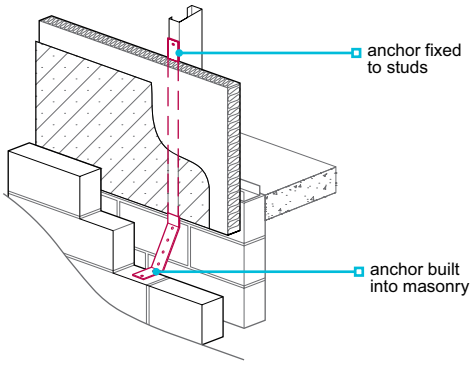

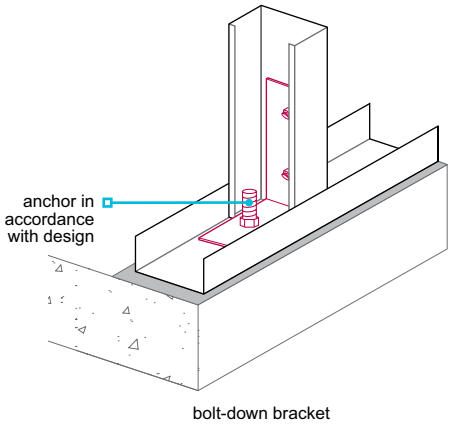

Anchoring should ensure:

- that appropriate edge details are provided and minimum edge distances specified by the fixing supplier are maintained, to avoid spalling of masonry or concrete
- where fixings are into masonry, they are into solid concrete blocks with a minimum crushing strength of 7.3N/mm^2 and positioned to receive fixings.

Where the design incorporates gas membranes (methane or radon), fixings should not puncture them, but where this is unavoidable, the penetration should be sealed.

Accommodation of deflection

Infill walls should accommodate anticipated deflection within the primary frame in accordance with the structural design.

6.10.11 Interfaces with staircases

Floors and walls shall be designed to accommodate installation of any staircases without compromising performance.

Wall linings should be continuous behind the string of staircases.

Fixing connections should be coordinated to ensure fire protection continuity and structural adequacy.

6.10.12 Fixing floor decking and ceilings

Also see: Chapter 6.4

Floor decking and ceilings shall be adequately fixed using a material of adequate strength and moisture resistance.

Joist spacing and decking thickness should be compatible. Material standards and minimum board thicknesses for domestic loads (imposed load of 1.5kN/m^2) are shown in Table 6.

Table 6: Joist spacing and decking type

Material	Standard	Minimum thickness of decking (mm)	
		400mm joist centres	600mm joist centres
Chipboard	BS EN 312 moisture-resistant type P5	18	22
Plywood	BS EN 636	15	18
Oriented strand board type OSB3	BS EN 300	15	18
Other materials	In accordance with Technical Requirement R3		

In England and Wales, the thicknesses listed above may not achieve the 15 kg/m^2 mass required to meet sound insulation requirements.

Flooring should be fixed at maximum 300mm centres using self-tapping screws or fixings approved by the LSF manufacturer and in accordance with Chapter 6.4 'Timber and concrete upper floors'.

Plasterboard should be fixed in accordance with Chapter 9.2 'Wall and ceiling finishes', using self-drilling, self-tapping screws.

6.10.13 Other design issues

The home shall be designed to adequately address all critical performance issues.

The designer should ensure that all critical performance issues listed in Table 7 are appropriately addressed.

Table 7: Critical performance issues requiring the designer's consideration

Topic	Description
Behaviour in relation to fire	■ Compliance with building regulations ■ Internal linings ■ Fire stops and cavity barriers ■ Penetrations
Acoustic performance	■ Compliance with building regulations
Moisture control, including thermal performance, condensation risk and water ingress	■ Type, thickness and location of insulation material ■ Protection from water ingress at low levels ■ Condensation risk analysis and management of water vapour in the structure
Wall construction	■ Acceptable claddings (see Chapter 6.9 'Curtain walling and cladding') ■ Provision of cavity ■ Type of wall ties ■ Sheathing
Balconies, terraces and parapets	■ Specific design considerations: structural design, durability, weather-tightness

Guidance for some of the performance issues listed in Table 7 may be included in the Stage 1 certificate.

6.10.14 Behaviour in relation to fire

LSF walls and floors shall be in accordance with applicable building regulations.

Guidance within supporting documents to the building regulations should be fully considered in the design and construction of LSF walls, floors and roofs.

Detailing and specification of components should be in accordance with the steel frame manufacturer's recommendations and/or guidance from SCI and supported with representative test evidence to appropriate standards such as BS 476:21 or BS EN 1365:1 for load-bearing walls, BS 476:22 or BS EN 1364:1 for infill walls and BS EN 1365:2 for floors.

The performance of specific details should be taken into account, including:

- fire protection to the structure around openings
- detailing of cavity barriers, including moisture protection to the barrier
- detailing around service penetrations
- compartmentation including interfaces with fire doors.

6.10.15 Acoustic performance

LSF walls and floors shall have adequate resistance to the passage of sound.

Internal walls and floors should be in accordance with relevant building regulations.

Separating walls

Separating walls should be in accordance with the design. Care should be taken to avoid gaps:

- between mineral wool quilt or batts
- between internal lining board layers
- between cavity barriers
- around openings for services.

Separating floors

The floating part of a floor should be separated from the main structure and surrounding walls by a resilient layer. Where boards are laid loose over insulation without battens, joints should be glued.

6.10.16 Moisture control

The structure shall be adequately protected from the effects of moisture. Details for LSF at low level shall fully consider the durability of materials, protection of the building from moisture ingress and thermal bridging. Issues to be taken into account include:

a) cavities in external walls
b) protection of steel at low level
c) DPCs, DPMs and cavity trays.

Cavities in external walls

A clear cavity in accordance with Table 8 should be provided between the cladding and insulation.

Table 8: Minimum cavity widths

Cladding	Cavity width
Masonry	50mm
Render on board background	25mm
Vertical tile hanging without underlay	No vertical cavity required where a breather membrane is provided
Other cladding[1]	15mm

Notes
1 See Chapter 6.9 'Curtain walling and cladding'.

The cavity should:

- extend at least 150mm below the DPC
- be kept clear to allow drainage
- be provided with weep holes or other suitable means of drainage.

Protection of steel at low level

The base rail of LSF should be kept a minimum of 150mm above the external ground level (or waterproofing layer of a flat roof, balcony or terrace) and cavity fill.

Locally raised ground levels (up to the internal floor finish) to less than 15% of the external perimeter (of an individual building, e.g. row of terraced homes, apartment blocks and detached garages, measured on plan) to accommodate level thresholds can be accepted. The cavity should be kept clear and allow drainage. Wall insulation should overlap the base rail by a minimum of 150mm.

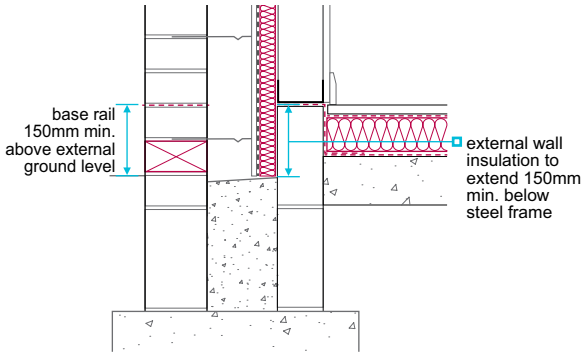

Alternatively, where the base rail or lowest steel is less than 150mm above ground level (or waterproofing layer of a flat roof, balcony or terrace), the design should consider the following:

- factory-applied protection to the steel frame to achieve a design life of 60 years. This may be LSF:
  - Galvanised to 600g/m², or
  - Galvanised to 275g/m² with the addition of two coats of heavy duty bituminous paint, 200µm total thickness
- sheathing, or backing boards to waterproofing, used below 150mm, should be service class 3 in accordance with BS EN 13986
- drainage of the cavity (ground conditions should be considered where the cavity discharges below ground level)
- insulation to limit thermal bridging and interstitial condensation. NHBC may ask for thermal modelling of the junction to demonstrate that these issues have been sufficiently limited.

Where levels are raised above the base rail or lowest steel:

- local areas of LSF walls (less than 15% of the external perimeter) retaining up to a maximum of 600mm of ground can be acceptable, subject to appropriate waterproofing design
- in addition, where more than 15% of the external perimeter has ground levels above the internal floor finish (up to a maximum of 600mm), the structure should be designed by an engineer in accordance with Technical Requirement R5.

Waterproofing should be designed by a waterproofing design specialist and be in accordance with Chapter 5.4 'Waterproofing of basements and other below ground structures'.

The manufacturer of the waterproofing system should confirm compatibility between the waterproofing and sheathing board, which should be supported by test evidence.

DPCs, DPMs and cavity trays

DPCs, DPMs and cavity trays should:

- be provided at openings to prevent rain penetration
- be installed underneath the full width of the base rail and lap with the DPM where present.

Materials acceptable for use as DPCs include:

- BS 6515 polyethylene
- BS 6398 bitumen
- materials assessed in accordance with Technical Requirement R3.

6.10.17 Insulation

Also see: BRE Report 'Thermal insulation:avoiding risks'

Insulation shall be correctly installed, be of a suitable material and thickness to comply with building regulations and reduce the risk of interstitial condensation.

Insulation should:

- be inert, durable, rot and vermin proof, and should not be adversely affected by moisture or vapour
- cover the whole external face of the wall and be complete within the frame
- extend 150mm below the base rail to minimise thermal bridging and maintain a warm frame
- be tightly butted with joints of rigid board insulation taped, where required by the design.

Foil-faced insulation boards with an integral facing on one side only should be fixed with the foil face on the cavity side.

Table 9: Acceptable insulation materials

Material	Relevant standard
Mineral wool	BS EN 13162
Flame retardant (FR) grade expanded polystyrene	BS EN 13163
FR grade extruded polystyrene	BS EN 13164
Rigid polyurethane foam and polyisocyanurate	BS EN 13165
Phenolic foam	BS EN 13166
Cellular glass	BS EN 13167
Other insulation materials	Technical Requirement R3

Account should be taken of Accredited Construction Details where applicable.

Reference should be made to BRE document BR 135 'Fire performance of external thermal insulation for walls of multi-storey buildings' when specifying the type of insulation system to be installed.

6.10.18 Vapour control layers

Vapour control layers (VCLs) shall restrict the passage of vapour from within the home to the steel frame and be correctly installed.

A VCL should be provided, unless a condensation risk analysis shows it is not necessary. An analysis in accordance with BS EN ISO 13788 (Glaser method), using the following boundary conditions, will generally be acceptable:

- >60% internal RH
- at 21°C internally
- at -2°C externally.

Split layers of VCL-type material should be avoided, except where condensation risk analysis shows it to be acceptable.

Where they are provided, VCLs should be:

- 500g polyethylene sheet, vapour control plasterboard, or material assessed in accordance with Technical Requirement R3
- fixed on the warm side of the wall insulation and frame
- in accordance with the design
- placed to cover the external wall, including base rails, head rails, studs, lintels and window reveals
- overlapping the base rail
- fully sealed and punctures made good.

Where polyethylene sheet is used:

- each joint in the VCL should be located on studs or noggings and lapped by a minimum of 100mm
- double-sided tape or adhesive should be used as a temporary fixing before the wall board is fixed.

Where vapour control plasterboard is used:

- joints between sheets should be positioned on studs or noggings
- care should be taken not to displace the vapour control material when cutting vapour control plasterboard.

6.10.19 Breather membranes

Breather membranes shall be capable of allowing vapour to pass into the cavity, and provided to protect the sheathing and frame from external moisture.

Breather membranes should be:

- vapour resistant to less than 0.6MNs/g (0.12 Sd) when tested in accordance with BS EN ISO 12572 using the set of conditions C and using five test specimens.
- capable of resisting water penetration in the anticipated exposure
- self-extinguishing
- durable
- installed so that each joint is protected and moisture drains outwards
- lapped to a minimum of 100mm at horizontal joints and a minimum of 150mm at vertical joints.

Breathable membranes should be used to protect sheathing board and insulation. Breather membranes may be omitted where water resistant insulation boards with taped joints are used. Tape should be of a type recommended by the insulation manufacturer, breathable to allow water vapour to move freely and resist water penetration. Suitable taping should be applied at the lintel interfaces and other penetrations to direct water outside.

6.10.20 Cladding, lining and sheathing boards

Cladding panels, lining and sheathing boards shall be suitable for their intended purpose. Issues to be taken into account include:

a) external cladding
b) sheathing
c) internal lining boards.

External cladding

The design and construction of the external walls should fully consider:

- cavity drainage
- differential movement
- restraint
- fire resistance.

In external walls, a clear cavity should be provided between the external insulation and the cladding. The cavity should:

- be drained
- have cavity trays and weep holes installed where the cavity is not fully maintained, e.g. at cavity barriers
- be kept clean, free of obstructions and capable of draining freely
- have drainage at its base, equivalent to 500mm²/m run, e.g. for masonry, one open perpend every 1.5m
- have drainage openings placed to prevent the ingress of rain.

Masonry cladding should:

- be constructed in accordance with Chapter 6.1 'External masonry walls'
- not be supported by the LSF walls unless designed in accordance with Technical Requirement R5
- be tied to the LSF walls with flexible wall ties fixed through to the studs
- include movement joints as appropriate (e.g. a 1mm gap per continuous metre of vertical clay masonry should be provided at openings and soffits) to allow for differential movement due to thermal expansion, shrinkage (in concrete masonry) and moisture expansion (in clay) in accordance with PD 6697. The brick/block manufacturer's advice should be sought on the level of movement to be expected.

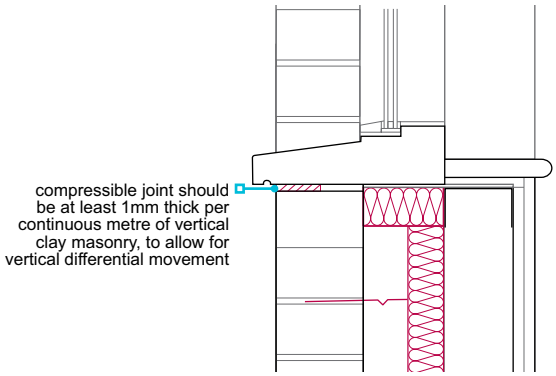

Lightweight cladding should be:

- in accordance with Chapter 6.9 'Curtain walling and cladding'
- compatible with the LSF system construction
- supported by systems assessed in accordance with Technical Requirement R3 which ensure that cladding design loads are effectively transferred to the building structure.

Sheathing

Sheathing boards should be:

- of a suitable strength and quality
- compatible with the steel frame
- attached using suitable quality fixings.

Sheathing boards contribute to meeting many of the critical performance issues described in Table 7 and cannot be easily replaced, so they should be specified in accordance with the design life of the building.

Sheathing boards should be appropriate for the exposure of the building and suitable for use in humid conditions.

Table 10: Requirements for sheathing board materials

Material	Relevant standards	Minimum thickness (mm)
Cement bonded particle board	BS EN 13986 BS EN 634 BS EN 12467	By design
Oriented strand board (OSB3 required)	BS EN 300	8.0
Plywood	BS EN 13986 BS EN 636	5.5
Proprietary materials	Technical Requirement R3	Technical Requirement R3

Fixings used to apply sheathing boards should be selected in accordance with the board manufacturer's instructions and be suitably specified for strength and long-term durability in the anticipated exposure condition.

Sheathing boards should be adequately protected from weather during construction. This can be done through a combination of:

- the use of water resistant boards with accredited proof of performance in accordance with Technical Requirement R3
- the use of sealed jointed water resistant insulation to reduce water penetration
- the application of a breathable membrane to the sheathing board
- sequencing construction to minimise daily exposure with fully waterproof temporary coverings overnight and during inclement weather.

For all sheathing board types, junctions between adjacent boards, and at interfaces with other building elements, should be sealed and/or taped in accordance with the manufacturer's recommendations.

A breather membrane should be used to provide protection to the building during and after construction in areas of very severe exposure to wind-driven rain.

Internal lining boards

Internal lining boards should be:

- fixed in accordance with the design and the manufacturer's recommendations
- attached to light steel studs using self-drilling, self-tapping screws at a maximum of 300mm centres.

In addition to the general guidance for internal lining boards, plasterboard should:

- be shown to provide adequate fire resistance where required
- comply with BS EN 520 and be in accordance with Chapter 9.2 'Wall and ceiling finishes'
- be a minimum of 9.5mm for stud spacing up to 450mm
- be a minimum of 12.5mm for stud spacing up to 600mm.

6.10.21 Wall ties

Wall ties shall be suitable to connect the steel frame to the cladding.

Generally, wall ties should be:

- in accordance with BS 845-1
- fixed to the studs and not the sheathing
- inclined away from the LSF
- austenitic stainless steel and of a type which accommodates the differential movement between the LSF and the cladding, or assessed in accordance with Technical Requirement R3.

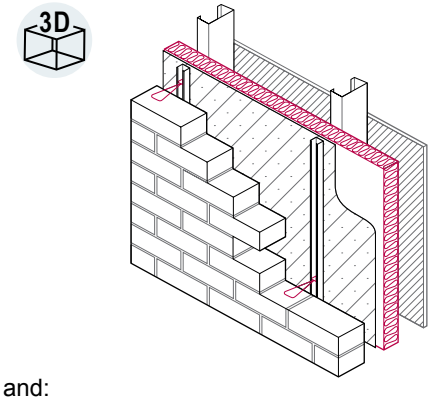

Wall ties for masonry cladding should be according to the design and:

- installed at a minimum density of 3.7 ties/m^2, e.g. spaced at a maximum of 600mm horizontally and 450mm vertically (except where alternative densities have been demonstrated by building specific calculation and accepted under the Stage 2 certificate)
- spaced at jambs of openings, a maximum of 300mm vertically within 225mm of the masonry reveal (additional studs may be needed to achieve this)
- kept clean and free from mortar droppings.

6.10.22 Services

Services shall be adequately protected from damage.

Service mains and service outlets should be:

- designed to ensure the fire resistance of walls and floors is not impaired
- designed to ensure that the required sound insulation of walls and floors is maintained
- installed in accordance with the design
- on the warm side of the insulation.

Light steel joists or studs should not be notched to accommodate services. Holing of structural light steel members should be carried out in accordance with this chapter and the manufacturer's recommendations. On-site hole cutting should be avoided, as badly cut edges can have an adverse effect on the durability of the frame and may cause damage to pipes and cables.

Where on-site adaptation of the frame is unavoidable, it should be undertaken by the manufacturer, with prior notification to NHBC, and completed in line with the steel frame designer's remedial details with all cut edges treated and badly cut edges avoided. Significant adaptations should be overseen by the design engineer.

Grommets should be used around the edge of service holes to protect electrical cables and reduce the risk of bimetallic corrosion between the LSF and copper pipes. Swaged holes for electric cables and plastic piping do not require grommets.

In Scotland, services are not permitted within:

- framed separating walls
- separating wall cavities.

6.10.23 Further information

- *The Steel Construction Institute (SCI) publications, Silwood Park, Ascot, Berkshire, SL5 7QN*
  SCI publications:
  - Building design using cold formed steel sections:construction detailing and practice (P165)
  - Modular construction using light steel framing: design of residential buildings (P302)
  - Light steel framing in residential construction (P402)
  - Design and installation of light steel external wall systems (ED017)

Render

CHAPTER 6.11

This chapter gives guidance on meeting the Technical Requirements for factory-made and traditional render applied to external walls, and render onto board backgrounds.

Render intended for below ground waterproofing is outside the scope of this chapter (see Chapter 5.4 'Waterproofing of basements and other below ground structures'). Chapter 6.9 'Curtain walling and cladding' contains guidance for insulated render systems.

6.11.1	Compliance	01
6.11.2	Provision of information	01
6.11.3	Weather conditions	02
6.11.4	Backgrounds	03
6.11.5	Accommodation of movement	04
6.11.6	Mixes	05
6.11.7	Detailing	08
6.11.8	Render onto board backgrounds	10
6.11.9	Finishes	11

NHBC

Raising Standards. Protecting Homeowners

Introduction

This chapter is arranged in sections covering:

- **site and factory-made render**
- **render onto board backgrounds**
- **detailing.**

Definitions for this chapter

Background	The surface to which the render is applied.
Base coat	The first render coat.
Cured	The finished render state when all chemical reactions have taken place.
Decorative finishes	An aesthetic finish not generally contributing to weathertightness.
Dry dash	Aggregate applied to finish the render.
Factory-made	Render mortar arriving on site premixed, generally including admixtures and colouring, and either ready to use or requiring only the addition of water.
Final coat	The last render coat.
Movement joint	A joint designed to accommodate predicted movement in the background or render.
Preparation coat	An application to provide an appropriate key or bond, including a spatterdash or stipple coat.
Proprietary render systems	Renders and their specified backgrounds with proven compatibility, which fall outside the guidance given for site and factory-made renders.
Ribbed metal lathing	Metal lathing that can be used as a carrier for render.
Site-made	Renders made on site to recognised designated or prescribed mix proportions.
Structure	Structural elements of the building providing support to the render or proprietary render system.
Substrate	The wall composition which offers support to the background intended to be rendered (the substrate and background may sometimes be the same).
Undercoat	The coats preceding the final coat.
Wet dash	A traditional render consisting of aggregate bound in slurry applied to the undercoat prior to setting.

6.11.1 Compliance

Also see: BS EN 13914-1 and BS 8000-0

Render, including site-made, factory-made and render onto board backgrounds shall comply with the Technical Requirements.

Render that complies with the guidance in this chapter will generally be acceptable.

6.11.2 Provision of information

Designs and specifications shall be produced in a clearly understandable format, include all relevant information and be distributed to all appropriate personnel.

Design and specifications should be issued to site supervisors, relevant specialist subcontractors and/or suppliers and, where relevant, include the following:

- A full set of drawings indicating areas to be rendered, and construction details, e.g. the position of movement joints and how interfaces are formed.
- The render manufacturer's technical information, including parts of the system design manual or installation guidance relevant to the specific site and construction type.
- Mix proportions for site-made render.
- Details of the substrate and background.
- Details of any technical assessments (i.e. third-party certifications).
- Details of interfaces and abutments, such as joints, junctions and service penetrations.
- Ancillaries that form part of a rendering system.

Table 1: Process chart for the application of site - and factory-made render to masonry backgrounds

Process	Steps	See clause
Structure design	Identify a suitable background material compatible with the intended render finish and consider any preparation requirements	6.11.4
	↓	
	Consider how movement will be controlled, i.e. are movement joints or bed joint reinforcement needed?	6.11.5
Render design	↓	
	Select an appropriate render strength that is compatible with the background	6.11.6
	↓	
	Determine the exposure zone which will influence the render's thickness	6.11.6
	↓	
Construction	Protect the background from adverse weather conditions at the earliest opportunity during and following construction	6.11.3
	↓	
	Assess the likely weather conditions prior to and after rendering	6.11.3
	↓	
	Assess the background, e.g. suction and surface preparation, and apply a preparation coat where necessary	6.11.4
	↓	
	Protect the completed render as it cures	6.11.3

6.11.3 Weather conditions

Rendering shall only be carried out in suitable weather conditions, unless appropriate precautions are taken.

Consideration should be given to likely weather conditions and, where required, measures taken to allow render to cure satisfactorily.

When applying render in wet conditions:

- the background should not be saturated
- downpipes or temporary downpipes should be used to prevent the background or completed render from becoming saturated
- curing render should be protected from heavy rainfall
- specialist preparation coats should be used in accordance with the manufacturer's recommendations.

When applying render in hot conditions the following precautions should be considered:

- avoid curing render from being directly exposed to strong sunlight
- lightly spray the render with clean water to prevent rapid drying.

When applying render in cold conditions:

- the air temperature should be at least 2°C and rising
- the background should be free from visual signs of frost
- the background should not be saturated.

Where the air temperature is at, below or likely to fall below 5°C, appropriate precautions such as covering with a hessian sheet should be used to protect curing render.

Factory-made render should be installed in accordance with the manufacturer's recommendations for weather conditions.

Acrylic renders have different curing requirements which should be taken into account.

6.11.4 Backgrounds

Backgrounds shall be appropriate for their intended purpose and suitably prepared to receive render. Issues to be taken into account include:

a) preparation of masonry backgrounds
b) preparation of clay brick backgrounds
c) ribbed metal lath.

Preparation of masonry backgrounds

Masonry backgrounds should be constructed in accordance with Chapter 6.1 'External masonry walls' and include DPCs and cavity trays. The thickness of single-leaf masonry walls should be in accordance with PD 6697.

The surface to be rendered should be free from dust, loose particles, efflorescence and organic growth, and, where applicable, be prepared in accordance with the render manufacturer's recommendations.

Masonry backgrounds with a smooth surface or close texture should be treated to provide an adequate key by either applying:

- lath, or
- a spatterdash or stipple coat.

The suction of the block should be appropriate for rendering. High or low suction will generally require a preparatory coat. The likely suction of the block can be gauged by applying a small quantity of water to the surface and observing the effects:

- Water being absorbed instantly is an indication of high suction.
- Water running from the surface with little absorption suggests the background has low suction.

A spatterdash coat typically comprises cement and sand at a ratio of 1:3 mixed with water and often a bonding agent, such as styrene butadiene rubber (SBR) or ethylene vinyl acetate (EVA). The mix should be applied by dashing onto the background to give a rough texture approximately 3-7mm thick.

Generally, raking out mortar joints to blockwork will not sufficiently improve the key, and may extend the curing time of the base coat.

Preparation of clay brick backgrounds

The brick manufacturer's recommendations for rendering should be followed.

Where S1 bricks are used, the render mix should resist sulfate.

To provide an appropriate bond, clay brick backgrounds with a water absorption rate of between 9% and 15% should generally have sufficient suction to provide a mechanical key. Alternatively, when rendering onto bricks, one or more of the following methods of improving the key can be adopted:

- Keyed bricks used.
- A spatterdash coat applied.
- Mortar joints raked out to a depth of 10-12mm (although this may increase curing time).

Render on an external leaf of clay bricks (F2,S1 or F1,S1 designation bricks to BS EN 771) in severe or very severe exposures is not permitted where the cavity is to be fully filled with insulation.

Ribbed metal lath

Ribbed metal lath should be:

- fixed in accordance with the manufacturer's recommendations
- supported at 350mm and up to 600mm centres for stiffer metal profiles
- fixed with the correct side to be rendered facing out
- fixed with a 25mm drained and vented cavity when applied to framed structures
- austenitic stainless steel to BS EN 10088-1.

Render onto ribbed metal lath can be vulnerable to damage where impact is likely to occur, such as beside communal paths. Appropriate reinforcement may be used to help improve the render's impact resistance.

6.11.5 Accommodation of movement

Also see: PD 6697

Rendered walls shall be detailed to reduce the risk of damage due to movement in the background. Issues to be taken into account include:

a) movement in masonry background
b) dissimilar materials
c) movement in ribbed metal lath render.

The construction should include appropriate measures to reduce the risk of damage to the render caused by movement in the background, such as shrinkage, thermal or differential movement. The designer should follow the guidance in this chapter, together with the render/background manufacturer's recommendations. Alternatively, provision for movement should be designed by an engineer in accordance with Technical Requirement R5.

Areas of the building to be rendered should be identified prior to construction, and movement control considered as part of the design.

Movement in masonry background

Render and masonry backgrounds should be detailed to reduce the likelihood of cracking and crazing in the render. Issues to be taken into account include:

- the potential for movement in the background and render
- size, quantity and positioning of openings
- compatibility with the background
- density of the masonry
- the size and geometry of rendered panels
- the orientation of the building
- thermal shock
- moisture content of the materials
- exposure conditions.

Where length/height ratios are greater than 3:1, consideration should be given to providing suitably designed:

- movement joints, or
- bed joint reinforcement.

Where movement joints are provided, they should:

- be continued through the background and render (including any horizontal beads)
- be made weathertight with an appropriate sealant
- not align with openings such as windows, doors or meter boxes.

Bed joint reinforcement should be provided in the first two courses of the external masonry leaf above and below any opening. Where possible, the reinforcement should project 600mm beyond the opening.

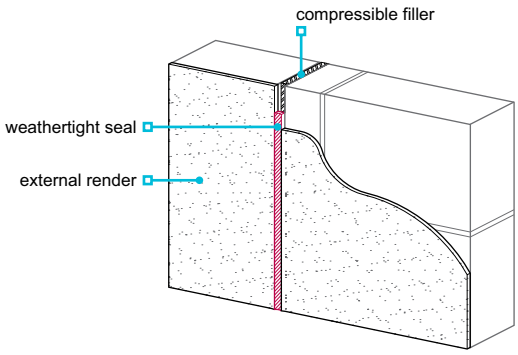

Table 2: Concrete block categorisation

Category	Compressive strength of the blockwork	Dry density
Low density aircrete		
Normal density aircrete		
Ultra lightweight aggregate		
Lightweight aggregate		
Dense aggregate		

Table 3: Preparation of blockwork backgrounds[1]

Category	Normal movement joint spacing	Maximum distance of joint from restrained end, i.e. corners	Suction control
Low density aircrete	Specialist advice required[2]		
Normal density aircrete	6m	3m (half normal spacing)	Yes
Ultra lightweight aggregate	6m	3m (half normal spacing)	Not generally required
Lightweight aggregate	7.5 - 9m	Half normal spacing	Not generally required
Dense aggregate	7.5 - 9m	Half normal spacing	Not generally required

Notes:
1 The guidance in this table is generally acceptable for render coats in accordance with Table 5 and factory-made one-coat render based on 1:1:6 mix = 3.5N/mm².
2 Specialist advice from the block and render manufacturer should be sought.
3 Specialist advice should be sought where clay brick backgrounds are used.

Dissimilar materials

Backgrounds should not be constructed from materials of different densities. Where possible, render should not be continuous across dissimilar materials. Where this cannot be avoided the render should:

- be stopped at appropriately formed movement joints, or
- have austenitic stainless steel lath reinforcement carried across the joint with a separation strip, such as building paper, behind.

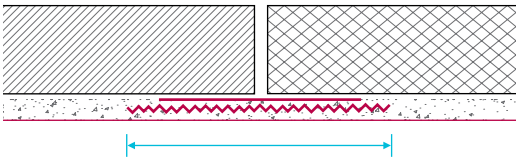

Where significant differential movement is likely to occur, such as the junction between masonry and board backgrounds, render should be stopped either side of an appropriately formed joint.

Movement in ribbed metal lath render

To avoid cracking, ribbed metal lath backgrounds should be divided with movement joints into bays no more than 5m wide and:

- site-made render should be applied in three coats
- factory-made render should be applied in accordance with the manufacturer's recommendations.

6.11.6 Mixes

Also see: Chapter 6.1

The render mix shall be appropriate for the intended purpose, be compatible with the background and be designed to minimise the risk of de-bonding, cracking and crazing. Issues to be taken into account include:

a) sand
b) mix design
c) admixtures and bonding agents
d) coat thickness of site-made render
e) application of site-made render
f) factory-made renders
g) lime.

Render coats should not be stronger than the background or any previous coat to which they are applied. Weaker coats can be achieved by reducing the cement content of each coat or by using the same mix but decreasing the coat thickness.

Potable water should be used for mixing render.

Sand

Sand for render should be well-graded category 2, in accordance with BS EN 13139. Sand with excessive fine material, clay or silt can shrink and crack so should be avoided.

A sharp gritty or coarse sand is required for strength in the backing coats, but finer sand should be used for the finishing coat.

Typical sand grades should be:

- 5mm down to 0.075mm – undercoat(s)
- 1.18mm down to 0.075mm – final coat.

Mix design

Designation ii, iii and iv (strength class M6, M4 and M2) mixes are generally used for rendering.

Stronger mixes are generally more moisture resistant; however, they are also more prone to shrinkage, which increases the likelihood of the render cracking. Weaker mixes may be appropriate for weaker backgrounds in less exposed zones.

For exposure zone classification, see Clause 6.1.6.

Table 4: Designation mix proportions for cement-based mixes

	Mix designation	Mortar compressive strength class equivalent	Mix proportions by volume based on damp sand				
			Cement:lime: sand	Cement:ready-mixed lime/sand[1]		Cement:sand[1] (using plasticiser)	Masonry cement:sand[1]
				Ready-mixed lime:sand	Cement: ready-mixed material		
Weaker – stronger	i	M12	1:¼:3	1:12	1:3	-	-
	ii	M6	1:½:4 - 4½	1:9	1:4 - 4½	1:3 - 4	1:2½ - 3½
	iii	M4	1:1:5 - 6	1:6	1:5 - 6	1:5 - 6	1:4 - 5
	iv	M2	1:2:8 - 9	1:4½	1:8 - 9	1:7 - 8	1:5½ - 6½
	v	-	1:3:10 - 12	1:4	1:10 - 12	-	-

Notes:
1 With fine or poorly graded sands, the lower volume of sand should be used.

2 Where soluble salts could be present in the background, mixes should have sulfate-resisting properties.

3 Where pigments are specified, batching should be undertaken with care to ensure colour consistency pigments to BS EN 12878 can be used but should not exceed 10% of the cement weight, or 3% where carbon black is used (white Portland cement may be used).

Render mixes should be:

- in accordance with BS EN 13914 'Design, preparation and application of external rendering and internal plastering'
- appropriate to the strength of the background
- checked against the specification
- of adequate strength and thickness to achieve durability.

Where enhanced water-resisting properties are required:

- Portland cement with a waterproofing agent already incorporated may be used in the undercoat, or
- a waterproofing agent should be added to the render mix in accordance with the manufacturer's recommendations.

Rendering mortar should not be left turning over in the mixer for longer than necessary.

Admixtures and bonding agents

Admixtures and bonding agents should:

- be assessed in accordance with Technical Requirement R3
- be used in accordance with the manufacturer's recommendations
- be compatible with the render
- not be used with factory-made renders without the prior approval of the render manufacturer.

The effect on the adhesion of subsequent render coats should be considered when water-repelling agents are used.

Plasticisers and air entrainers should comply with BS EN 934 and not be used in mortars containing masonry cement.

Coat thickness of site-made render

The number of coats should be designed to take account of the background and exposure conditions of the site.

The mix and its application should be suitable for the specific background. Items to consider include:

- the number and thickness of coats
- the strength of the coat (subsequent coats should be weaker than the background or the previous coat).

Render should have a nominal total finished thickness of not less than:

- 16mm for sheltered and moderate exposure zones, or
- 20mm for severe and very severe exposure zones.

Table 5: Site-made render designation and typical thickness

	Typical two-coat application
Normal density aircrete	
Undercoat	8-12mm designation iii (M4)
Final coat	6-8mm designation iv (M2)[1]
Ultra lightweight and lightweight aggregate blockwork	
Undercoat	8-12mm designation iii (M4)
Final coat	6-8mm designation iv (M2)[1]
Dense aggregate blockwork	
Undercoat	8-12mm designation ii (M6)
Final coat	6-8mm designation iii (M4)
Clay brick	
Undercoat	8-12mm designation ii (M6)
Final coat	6-8mm designation iii (M4)
Ribbed metal lath	
First coat	8-12mm designation i (M12)
Undercoat	10-12mm designation ii (M6)
Final coat	6-8mm designation ii (M4)

Notes:
1 Designation iii (M4) should be used for the final coat in severe or very severe exposure zones.
2 For block classifications, see Table 2.
3 Specialist advice should be sought for low density aircrete backgrounds.

Where a three-coat render is used, this should include a second undercoat that is:

- the same thickness but a slightly weaker mix than the first undercoat, or
- a slightly thinner coat of the same strength mix.

Application of site-made render

When applying render, previous coats should be allowed to cure before applying the next coat (typically three to four days).

To avoid surface crazing:

- properly graded sand should be used with limits on fine sand proportions
- overworking (polishing) of the render should be avoided, as this causes laitance to be drawn to the surface.

Surfaces should be appropriately prepared to receive following coats. This can be achieved by either combing or scratching. The final coat should be applied to an undercoat that is suitably keyed.

The size of the background to be rendered should be assessed to determine if it can be rendered in the time available. This will help to establish the most suitable location for day joints.

The final coat should be of uniform thickness and not used to even out irregularities, which should be accommodated in previous coats.

Factory-made renders

Factory-made renders should be applied in accordance with the manufacturer's recommendations, including those for ancillary components.

Factory-made renders with a declared mix in accordance with Table 4, applied to the thickness recommended in Table 6, and that otherwise comply with the recommendations for site-made renders, will generally be acceptable to NHBC.

Table 6: Minimum thickness of factory-made single-coat renders

Background	Sheltered and moderate exposure zone	Severe and very severe exposure zone
Single-leaf masonry wall	20mm	In accordance with the render manufacturer's recommendations.
Masonry cavity wall partially filled	15mm	
Masonry cavity wall fully filled	20mm	
Lath[1]	15mm	

Notes:
1 Lath backgrounds generally require two coats.
2 Alternative single-coat thicknesses may be acceptable when accompanied by appropriate third-party assessment in accordance with Technical Requirement R3.

Lime

Render mixes containing hydrated lime can improve the ability of the render to accommodate movement, improving resistance to cracking and crazing. The use of lime should be in accordance with BS EN 459.

Natural hydraulic lime (NHL) is used without cement, which can allow greater moisture vapour movement through the structure. Specialist advice may be required for the use of NHL render.

6.11.7 Detailing

Rendering shall be detailed to ensure appropriate weathertightness and durability. Issues to be taken into account include:

a) copings, cappings and sills
b) abutments and interfaces
c) weepholes
d) detailing at openings
e) exposed elements
f) ancillary items
g) render below the DPC
h) resistance to sulfate attack.

Copings, cappings or sills

Render should be protected from damage by copings, cappings or sills made of a material of low permeability or with suitably detailed DPCs. A minimum 40mm projection with a throating or drip detail should be provided to all copings, cappings and sills.

Extending sills or sub-sills beyond window reveals can help to disperse water and prevent staining.

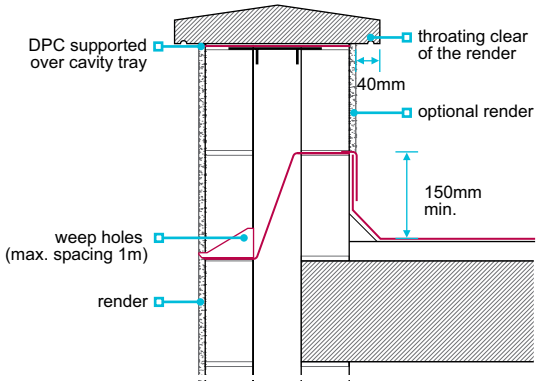

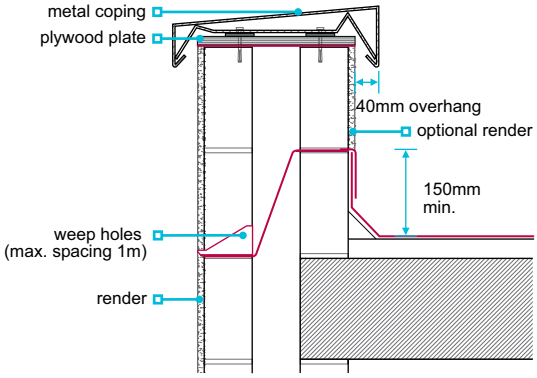

Abutments and interfaces

Where raked roof abutments occur against a rendered masonry wall, preformed cavity trays and appropriate flashings should be provided. Clauses 6.1.17 and 7.2.20 contain guidance for stepped cavity trays and flashings to masonry walls.

Render abutting exposed features, such as stone string courses or quoins, should be finish neatly without gaps.

Abutments between render and exposed masonry should be detailed to prevent moisture passing in behind the render or adversely affecting the building.

When rendering into window or door frames, the render should be stopped against a bead and sealed, or a bead of sealant applied between the frame and render.

Weepholes

Weepholes should be provided:

- where required for ventilation to timber frame construction
- to the last tray at stepped abutments
- in severe or very severe exposure zones where rendering is returned back into the window or door head (weepholes are not required where the render is not returned)
- to cavity trays on parapet walls.

To prevent staining, weepholes should be of a type which restricts the entry of wind-driven rain.

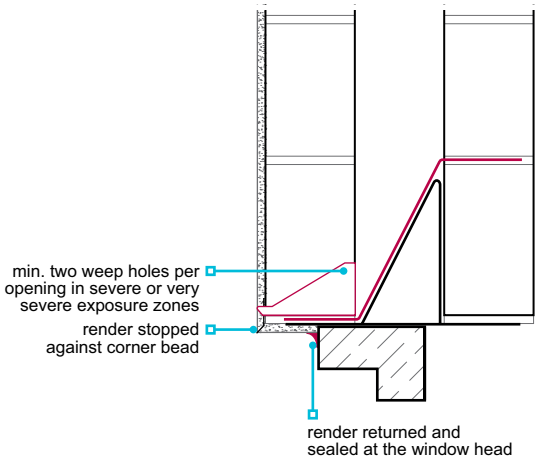

Detailing at openings

Design features around openings and at the head of the rendering should provide shelter and help shed water away from the surface below.

In areas of very severe exposure, and in Scotland, a check reveal should be provided at openings.

Proprietary render systems should be detailed at abutments in accordance with the manufacturer's recommendations.

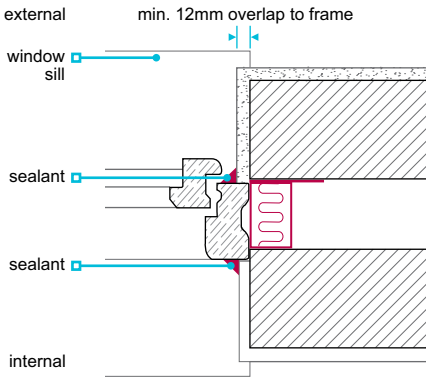

Exposed elements

Render to exposed masonry elements, such as parapets, freestanding walls, pillars, retaining walls or chimneys, should be of a type appropriate for severe exposure conditions.

When rendering both sides of freestanding or parapet walls of single leaf construction, care should be taken to prevent damage caused by moisture becoming trapped. For example:

- the detailing should prevent the masonry from becoming saturated
- the wall should be protected from rain during construction
- rendering both sides of single leaf walls in areas of very severe exposure to frost attack should be avoided (see Clause 6.1.6c).

Bricks with S1 or S0 designation are not recommended for exposed elements that are to be rendered.

Ancillary items

Stop beads and render stops should be austenitic stainless steel or PVC. Long runs of steel beads and stops should be avoided due to their expansion potential.

Corner beads should have an appropriate projection to prevent thin tapering of the render which reduces the its overall thickness.

Beads should be:

- adhesive-fixed using a material appropriate for external use and in accordance with the manufacturer's recommendations, or
- mechanically fixed using suitably durable fixings.

Render below the DPC

To prevent damage caused by prolonged periods of wetting -, it is preferable to stop the render at DPC level. Where rendering is continued below the DPC, the following precautions should be taken:

- for site-made render, use a stronger mix (M4) that is sulfate resisting, or
- factory-made render used in accordance with the manufacturer's recommendations.

Consideration should be given to providing:

- appropriate drainage installed along the perimeter or ground falling away from the building
- adjacent surface finishes which do not promote splashing.

Admixtures may be required to enhance performance.

Resistance to sulfate attack

To prevent sulfate attack, the wall construction should restrict moisture from entering into the background and having a detrimental effect on the performance of the render.

When detailing between the render and exposed brickwork, it is advisable to use appropriate materials resistant to, or without sources of, sulfate.

6.11.8 Render onto board backgrounds

Render onto board backgrounds shall be suitable for the intended use and detailed to provide satisfactory performance. Issues to be taken into account include:

a) provision of a system manual
b) compatibility between the render and background
c) fixing back to the structure
d) weather resistance
e) movement joints
f) board backgrounds.

Provision of a system manual

Where render is applied to a board background, the render manufacturer should clearly define the system in a manual, including:

- materials and components
- common details
- design guidance
- installation guidance.

The system should be used in full accordance with the manufacturer's guidance and recommendations.

Compatibility between the render and background

The background should be appropriate for its intended use. Issues to be taken into account include:

- compatibility between the board and render
- durability classification of the board and its suitability for use in exterior conditions, including resistance to weather prior to the render being applied.

Render onto board backgrounds should:

- not be applied where the surface has contamination, dust or loose particles
- consider the effects of solar radiation (colour, orientation and shading)
- be mixed to ensure colour consistency where coloured pigments are specified
- be specified and used with the appropriate ancillary items, such as trims to form corners and returns.

Boards should not be left exposed prior to rendering for longer than is necessary.

Fixing back to the structure

Board backgrounds should be fixed back to the structure in accordance with the manufacturer's recommendations.
The fixing design should consider:

- wind load
- pull-out strength
- pull-through resistance
- anticipated movement.

Fixing battens and rails should be installed vertically and not block drainage paths. Timber battens should be suitably treated.

To reduce the risk of damage from impact, especially at low level, where people have access around balconies and where cradle systems etc. can come into contact with the façade, appropriate precautions such as closer supports should be considered.

Cavity barriers should be appropriately detailed to ensure satisfactory performance and:

- be provided in accordance with building regulations
- not block ventilation or drainage paths
- account for movement in the frame
- be used in accordance with the manufacturer's recommendations.

Weather resistance

Timber and steel framed backing walls should have a minimum 25mm cavity.

Cavities to timber framed walls should be drained and vented, and cavities to steel framed walls should be drained.

Movement joints

Movement joints should be provided to accommodate movement in timber frame structures. Where board backgrounds are used, movement joints should be:

- formed in accordance with the system manufacturer's recommendations
- continued through the background board
- positioned to accommodate calculated deflection or movement
- provided at floor zones.

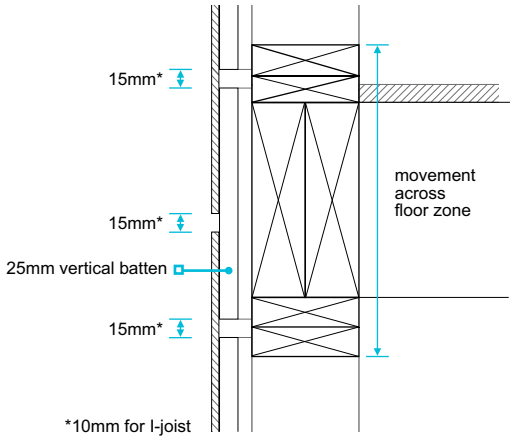

Board backgrounds

Board backgrounds to be rendered should be external grade and recommended for use in the render manufacturer's system manual.

Boards should be set out in accordance with the system manufacturer's recommendations, taking account of possible compression, deflection and alignment of joints in relation to openings in the external wall, such as windows and doors.

The render should have alkali-resistant mesh embedded into the base coat across the whole surface.

Edges of boards should be suitably treated to provide protection from weather during construction and to maintain durability after the render is completed.

6.11.9 Finishes

Finishes shall be to a satisfactory standard. Issues to be taken into account include:

a) decorative finishes

b) appearance.

Decorative finishes

The choice of decorative finish should take account of :

- the exposure zone
- background movement potential.

Scraped or textured finishes can reduce the risk of crazing and can break up the drainage path of rain-water as it runs down the face of the wall.

Wet dash and dry dash finishes should have an aggregate size generally between 6mm and 14mm. Dry dash should be applied to the final coat before it has fully cured.

Appearance

Render on external walls should be reasonably consistent in texture, finish, colour and line. Clause 9.1.2b provides further guidance on tolerances to render finishes.

Consideration should be given to detailing that will avoid obvious staining (e.g. the positioning of discharge pipes).

Completed render should be protected from damage that could be caused by construction activities.

Render may not be resistant to staining and may require periodic maintenance such as cleaning.